Application Notes and Protocols for the Fabrication of YbN-Based Heterostructures

Author: BenchChem Technical Support Team. **Date**: May 2026

Compound of Interest	
Compound Name:	*Ytterbium nitride*
CAS No.:	*24600-77-9*
Cat. No.:	*B1593723*

Get Quote

For Researchers, Scientists, and Drug Development Professionals

Introduction

Ytterbium Nitride (YbN) is a member of the rare-earth nitride (REN) family of materials, which are attracting significant interest due to their unique combination of semiconducting and magnetic properties.[1][2] These properties make them promising candidates for applications in spintronics, quantum computing, and advanced electronic devices.[3] Fabricating high-quality YbN thin films and heterostructures is crucial for exploring their fundamental properties and realizing their potential in various applications.

This document provides detailed application notes and protocols for the fabrication of YbN-based heterostructures using common thin-film deposition techniques. Due to the limited availability of literature focused exclusively on YbN, some of the provided parameters are based on general knowledge of rare-earth nitride growth and should be considered as starting points for process optimization.

Key Fabrication Techniques

© 2026 BenchChem. All rights reserved.

The primary techniques for depositing high-quality nitride thin films and heterostructures are Molecular Beam Epitaxy (MBE), Pulsed Laser Deposition (PLD), and Sputtering. Chemical Vapor Deposition (CVD) is also a viable method, although less commonly reported for rare-earth nitrides.

Molecular Beam Epitaxy (MBE)

MBE is a high-vacuum deposition technique that allows for the growth of high-purity, single-crystal thin films with atomic-layer precision.[4] It is well-suited for creating sharp interfaces in heterostructures.

Experimental Protocol for MBE Growth of YbN-based Heterostructures:

- Substrate Preparation:
  - Commonly used substrates for nitride growth include Sapphire (Al_2O_3), Silicon (Si), and Gallium Nitride (GaN) or Aluminum Nitride (AlN) templates.[4][5]
  - Substrates must be thoroughly cleaned to remove surface contaminants. A typical cleaning procedure for a sapphire substrate involves:
    - Degreasing in acetone, isopropanol, and deionized water in an ultrasonic bath.
    - Chemical etching in a piranha solution (H_2SO_4:H_2O_2 mixture) or a similar etchant.
    - Thermal cleaning in the MBE growth chamber at high temperatures (e.g., >800°C) to desorb any remaining contaminants.
- Growth Parameters:
  - Ytterbium Source: A standard effusion cell is used to evaporate high-purity ytterbium metal. The flux is controlled by the cell temperature.
  - Nitrogen Source: A radio-frequency (RF) plasma source is typically used to generate reactive nitrogen species from high-purity N_2 gas.
  - Substrate Temperature: The substrate temperature is a critical parameter influencing film quality. For rare-earth nitrides, growth temperatures typically range from 500°C to 900°C.

© 2026 BenchChem. All rights reserved.

[1]

- N_2/Yb Flux Ratio: The ratio of nitrogen to ytterbium flux is crucial for controlling the stoichiometry of the YbN film. Nitrogen vacancies are common defects in RENs and significantly affect their electronic and magnetic properties.[1] The N_2/Yb ratio should be carefully optimized.
- Growth Rate: Typical growth rates for MBE are in the range of 0.1 - 1 µm/hour.[6]
- In-situ Monitoring: Reflection High-Energy Electron Diffraction (RHEED) is used to monitor the crystal structure and growth mode in real-time.[7]

- Heterostructure Fabrication:
  - To grow a heterostructure, such as YbN/GaN, the GaN layer is first grown on the substrate under optimized conditions.
  - The growth is then interrupted, and the growth parameters are changed to those required for YbN deposition. The shutter for the Ga source is closed, and the shutter for the Yb source is opened.
  - For capping layers, a material like AlN can be deposited on top of the YbN layer to prevent oxidation upon exposure to air.[1]

Quantitative Data for MBE Growth of Nitrides (General):

Parameter	Typical Value	Reference
Base Pressure	< 1 x 10^{-10} Torr	[6]
Growth Pressure	10^{-5} - 10^{-7} Torr	[6]
Substrate Temperature	500 - 900 °C	[1]
N_2 Flow Rate	0.5 - 5 sccm	[8]
RF Plasma Power	200 - 500 W	[8]

Workflow for MBE Growth of a YbN/GaN Heterostructure:

© 2026 BenchChem. All rights reserved.

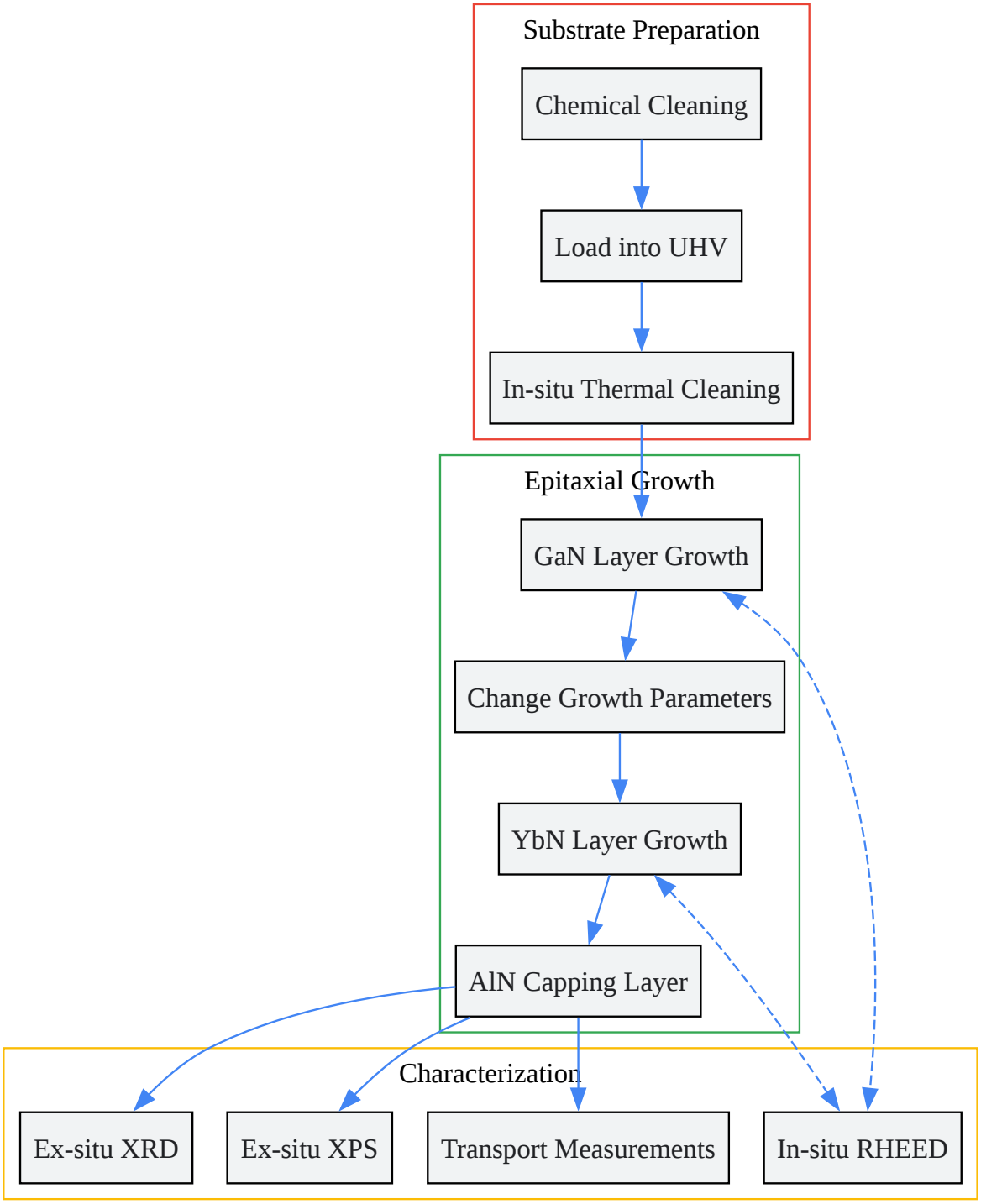

Click to download full resolution via product page

MBE fabrication workflow for a YbN/GaN heterostructure.

© 2026 BenchChem. All rights reserved.

Pulsed Laser Deposition (PLD)

PLD is a versatile technique where a high-power laser is used to ablate a target material, creating a plasma plume that deposits a thin film on a substrate.[9] It is particularly useful for growing complex materials with stoichiometric transfer from the target to the film.[10]

Experimental Protocol for PLD of YbN-based Heterostructures:

- Target Preparation:
  - A high-density, high-purity YbN target is required. If a YbN target is not available, a metallic Yb target can be used in a nitrogen atmosphere (reactive PLD).
- Substrate Preparation:
  - Similar to MBE, substrates need to be thoroughly cleaned.
- Deposition Parameters:
  - Laser: Excimer lasers (e.g., KrF at 248 nm) are commonly used.[11]
  - Laser Fluence: The energy density of the laser pulse on the target, typically in the range of 1-5 J/cm^2.
  - Repetition Rate: The number of laser pulses per second, typically 1-20 Hz.[12]
  - Background Gas: For reactive PLD from a Yb target, high-purity nitrogen gas is introduced into the chamber. The pressure is a critical parameter affecting the film's nitrogen content and crystallinity.
  - Substrate Temperature: Similar to MBE, the substrate is heated to promote crystalline growth, typically in the range of 500-800°C.
  - Target-Substrate Distance: This distance affects the deposition rate and the kinetic energy of the depositing species.
- Heterostructure Fabrication:

© 2026 BenchChem. All rights reserved.

- For a YbN/AlN heterostructure, an AlN layer can be deposited first by ablating an AlN target or an Al target in a nitrogen atmosphere.
- The target is then switched to YbN (or Yb for reactive PLD) to grow the subsequent layer. Multi-target carousels are often used for this purpose.

Quantitative Data for PLD of Nitrides (General):

Parameter	Typical Value	Reference
Base Pressure	< 1 x 10^{-6} Torr	[9]
N_2 Background Pressure	1 - 100 mTorr	[13]
Substrate Temperature	500 - 800 °C	[14]
Laser Fluence	1 - 5 J/cm²	[11]
Laser Repetition Rate	1 - 20 Hz	[12]
Target-Substrate Distance	4 - 8 cm	[15]

Workflow for PLD of a YbN/AlN Heterostructure:

© 2026 BenchChem. All rights reserved.

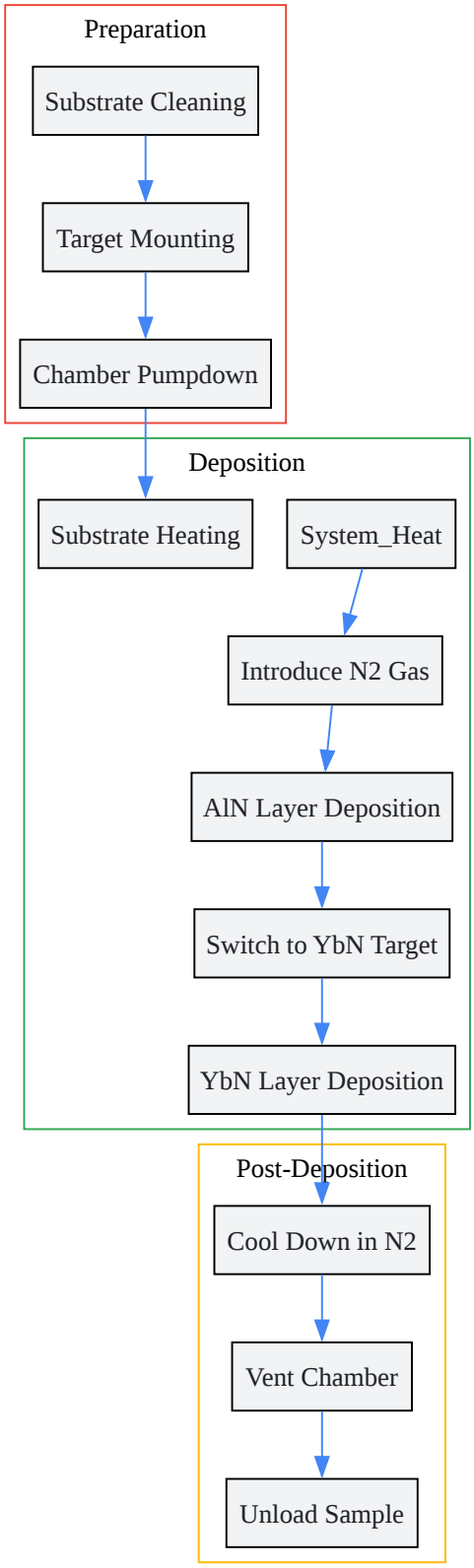

Click to download full resolution via product page

PLD fabrication workflow for a YbN/AlN heterostructure.

© 2026 BenchChem. All rights reserved.

Sputtering

Sputtering is a physical vapor deposition (PVD) technique where atoms are ejected from a solid target material due to bombardment by energetic ions.[2] Reactive sputtering is commonly used for nitride deposition, where a metallic target is sputtered in a mixture of an inert gas (e.g., Argon) and a reactive gas (e.g., Nitrogen).[16]

Experimental Protocol for Sputtering of YbN-based Heterostructures:

- Target and Substrate Preparation:
  - A high-purity Yb target is used for reactive sputtering.
  - Substrates are cleaned using standard procedures.
- Deposition Parameters:
  - Sputtering Gas: A mixture of Argon (Ar) and Nitrogen (N_2). The Ar/N_2 flow ratio is a critical parameter for controlling film stoichiometry.[16]
  - Sputtering Power: Can be DC or RF magnetron sputtering. RF sputtering is necessary for insulating targets or if a nitride layer forms on the metallic target ("target poisoning").[17]
  - Working Pressure: Typically in the mTorr range.
  - Substrate Temperature: The substrate can be heated to improve film crystallinity.
  - Substrate Bias: A negative bias can be applied to the substrate to increase the energy of incident ions, which can improve film density.
- Heterostructure Fabrication:
  - For a heterostructure like YbAlN, co-sputtering from Yb and Al targets in a nitrogen atmosphere can be used.[18] Alternatively, sequential sputtering from different targets can be employed.

Quantitative Data for Reactive Sputtering of Nitrides (General):

© 2026 BenchChem. All rights reserved.

Parameter	Typical Value	Reference
Base Pressure	< 1 x 10^{-7} Torr	[12]
Working Pressure	1 - 20 mTorr	[2]
Substrate Temperature	Room Temperature - 800 °C	[19]
Sputtering Power	50 - 500 W	[20]
Ar/N_2 Flow Ratio	1:1 to 10:1	[16]

Logical Relationship for Reactive Sputtering Process:

© 2026 BenchChem. All rights reserved.

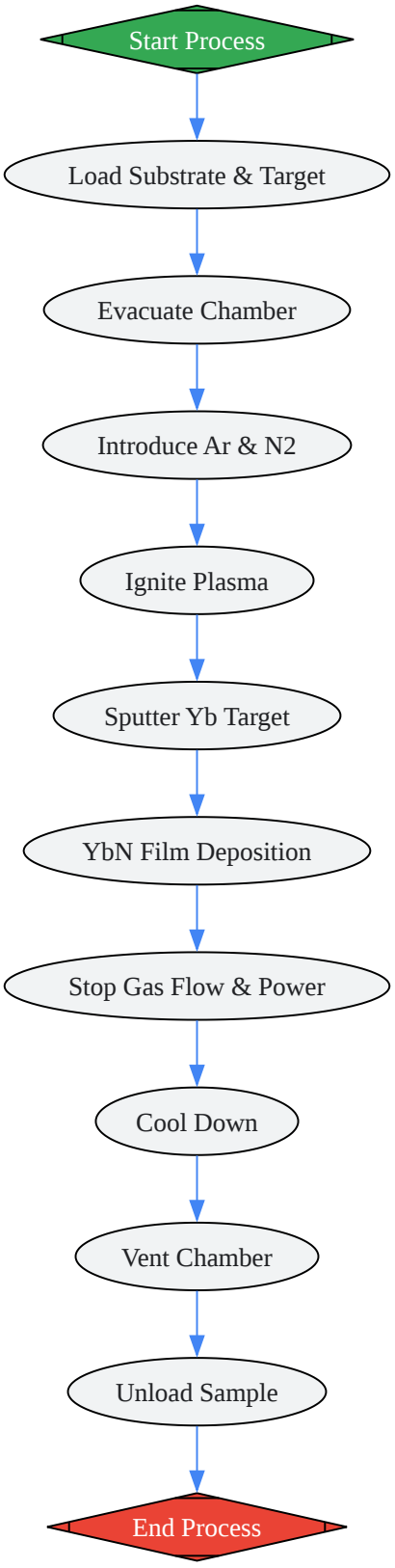

Click to download full resolution via product page

Logical flow of the reactive sputtering process for YbN thin films.

© 2026 BenchChem. All rights reserved.

Characterization of YbN-Based Heterostructures

After fabrication, it is essential to characterize the structural, chemical, and physical properties of the YbN-based heterostructures.

Characterization Technique	Information Obtained	Reference
X-ray Diffraction (XRD)	Crystalline structure, phase purity, lattice parameters, strain, and crystal orientation.	[21]
X-ray Photoelectron Spectroscopy (XPS)	Chemical composition, elemental bonding states, and stoichiometry. Can confirm the presence of Yb-N bonds and detect oxygen contamination.	
Transmission Electron Microscopy (TEM)	High-resolution imaging of the crystal lattice, interfaces in heterostructures, and defect analysis.	[22]
Atomic Force Microscopy (AFM)	Surface morphology, roughness, and grain size.	
Hall Effect Measurements	Carrier type (n- or p-type), carrier concentration, and mobility.	[1]
Magnetic Property Measurement System (MPMS)	Magnetic properties such as magnetization versus temperature and magnetic field.	[1]

Device Fabrication

Fabricating devices from YbN-based heterostructures involves standard microfabrication techniques.

© 2026 BenchChem. All rights reserved.

General Protocol for Device Fabrication:

- Isolation: If necessary, mesa structures are defined by photolithography and subsequent etching (e.g., reactive ion etching) to isolate individual devices.
- Contact Deposition: Ohmic contacts are patterned using photolithography or electron beam lithography, followed by metal deposition (e.g., Ti/Au) and lift-off.
- Gate Dielectric and Gate Electrode: For field-effect transistor (FET) structures, a gate dielectric (e.g., Al_2O_3, HfO_2) is deposited, followed by the deposition and patterning of the gate electrode.

Conclusion

The fabrication of high-quality YbN-based heterostructures is a challenging but rewarding endeavor. The protocols and data presented here provide a foundation for researchers to develop and optimize their growth processes. Further research is needed to establish a more comprehensive understanding of the growth-property relationships for YbN and to explore its full potential in novel electronic and spintronic devices.

Need Custom Synthesis?

BenchChem offers custom synthesis for rare earth carbides and specific isotopiclabeling.

Email: info@benchchem.com or Request Quote Online.

References

- 1. Item - Effect of the Growth Conditions on the Properties of Rare Earth Nitride Thin Films - Open Access Te Herenga Waka-Victoria University of Wellington - Figshare [openaccess.wgtn.ac.nz]
- 2. RE Nitrides [physics.bu.edu]
- 3. Rare-earth nitrides: fundamental advances and applications in cryogenic electronics: Open Access, Read PDF & Key Insights | Bohrium [bohrium.com]
- 4. MBE Growth of Oxides | Ahn Lab [ahnlab.yale.edu]
- 5. Gallium Nitride Growth > Research > Solid State Lighting Lab. [ssll.gist.ac.kr]

© 2026 BenchChem. All rights reserved.

- 6. apps.dtic.mil [apps.dtic.mil]
- 7. mti-japan.com [mti-japan.com]
- 8. djena.engineering.cornell.edu [djena.engineering.cornell.edu]
- 9. esrf.fr [esrf.fr]
- 10. youtube.com [youtube.com]
- 11. ira.lib.polyu.edu.hk [ira.lib.polyu.edu.hk]
- 12. dspace.mit.edu [dspace.mit.edu]
- 13. A practical guide to pulsed laser deposition - Chemical Society Reviews (RSC Publishing) DOI:10.1039/D2CS00938B [pubs.rsc.org]
- 14. Ultra-Short Pulsed Laser Deposition of Oxides, Borides and Carbides of Transition Elements | MDPI [mdpi.com]
- 15. youtube.com [youtube.com]
- 16. nmfrc.org [nmfrc.org]
- 17. tomosemi.com [tomosemi.com]
- 18. ken-system: Characteristics of YbGaN and YbAlN epitaxial thin film resonators [ken.ieice.org]
- 19. researchgate.net [researchgate.net]
- 20. arxiv.org [arxiv.org]
- 21. m.youtube.com [m.youtube.com]
- 22. researchgate.net [researchgate.net]

- To cite this document: BenchChem. [Application Notes and Protocols for the Fabrication of YbN-Based Heterostructures]. BenchChem, [2026]. [Online PDF]. Available at: [https://www.benchchem.com/product/b1593723/docs#application-notes-and-protocols-for-the-fabrication-of-ybn-based-heterostructures]

Disclaimer & Data Validity:

The information provided in this document is for Research Use Only (RUO) and is strictly not intended for diagnostic or therapeutic procedures. While BenchChem strives to provide accurate protocols, we make no warranties, express or implied, regarding the fitness of this product for every specific experimental setup.

© 2026 BenchChem. All rights reserved.

Technical Support: The protocols provided are for reference purposes. Unsure if this reagent suits your experiment?

Need Industrial/Bulk Grade? Request Custom Synthesis Quote

BenchChem

Our mission is to be the trusted global source of essential and advanced chemicals, empowering scientists and researchers to drive progress in science and industry.

Contact

Address: 3281 E Guasti Rd

Ontario, CA 91761, United States

Phone: (601) 213-4426

Email: info@benchchem.com

Contact our Ph.D. Support Team for a compatibility check

© 2026 BenchChem. All rights reserved.