application of bicyclohexanes in vertically aligned (VA) mode displays

Author: BenchChem Technical Support Team. **Date**: February 2026

Compound of Interest		
Compound Name:	*(trans,trans)-4-Ethyl-4'-propyl-1,1'-bi(cyclohexane)*	
CAS No.:	*96624-41-8*	
Cat. No.:	*B1591827*	*Get Quote*

Application Notes and Protocols

Topic: The Strategic Application of Bicyclohexane-Based Nematic Liquid Crystals in High-Performance Vertically Aligned (VA) Mode Displays

Abstract

Vertically Aligned (VA) mode Liquid Crystal Displays (LCDs) are a dominant technology in the high-end display market, renowned for their exceptional contrast ratios and wide viewing angles.[1][2][3] The performance of these displays is fundamentally dictated by the physicochemical properties of the liquid crystal (LC) mixture employed. This application note provides an in-depth technical guide on the utilization of bicyclohexane-based nematic liquid crystals, a superior class of materials for VA applications. We will explore the fundamental principles of VA mode operation, delve into the unique structure-property relationships of bicyclohexane LCs that render them advantageous, and provide detailed, field-proven protocols for the formulation and characterization of high-performance LC mixtures. This guide is intended for researchers and material scientists dedicated to advancing display technology.

The Foundational Principle of Vertically Aligned (VA) Mode Displays

© 2026 BenchChem. All rights reserved.

The VA mode is a type of nematic liquid crystal display that leverages a homeotropic alignment of LC molecules in the absence of an electric field.[4][5][6] This means the long axes of the rod-like LC molecules are oriented perpendicularly to the glass substrates.

Mechanism of Action:

- OFF State (Zero Voltage): The vertically aligned LC molecules do not significantly alter the polarization of light passing through them. When placed between two crossed polarizers, the light from the backlight is blocked by the second polarizer (the analyzer), resulting in an almost ideal black state.[1][4] This is the core reason for the intrinsically high contrast ratio of VA displays.[1][2]

- ON State (Voltage Applied): To switch the display to a transmissive (bright) state, the LC molecules must be reoriented. This is achieved by using a liquid crystal mixture with a negative dielectric anisotropy ($\Delta\varepsilon < 0$).[3][4][5] When a vertical electric field is applied, the LC molecules, seeking to align their direction of highest polarizability perpendicular to the field, tilt parallel to the substrates.[3][4][6] This tilt alters the polarization of the light, allowing it to pass through the analyzer and create a bright pixel.

The requirement for materials with negative dielectric anisotropy is non-negotiable for VA mode operation. This property is achieved by designing molecules where the net dipole moment is perpendicular to the principal molecular axis, often by incorporating lateral polar groups like fluorine atoms.[3][5]

© 2026 BenchChem. All rights reserved.

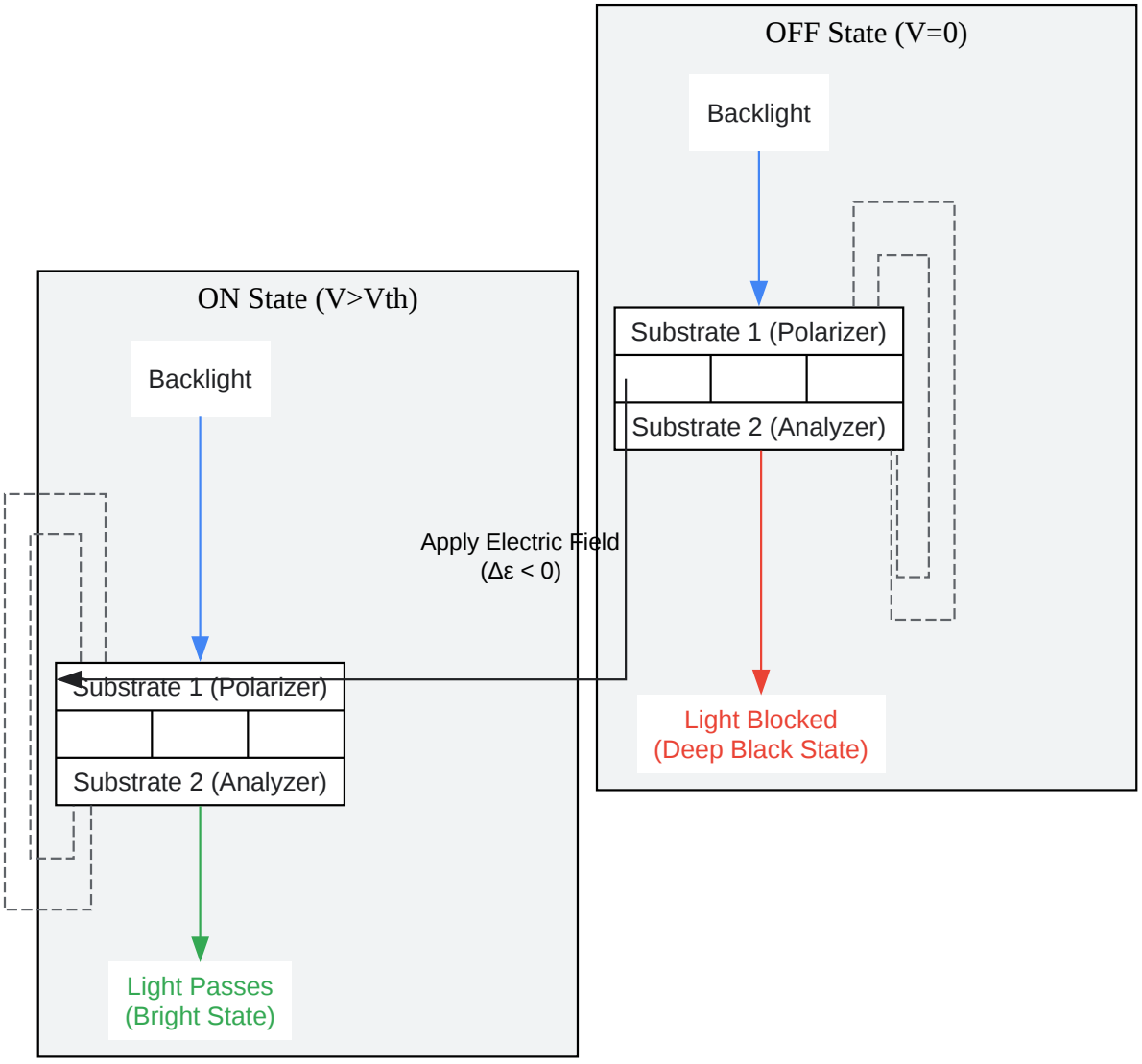

Click to download full resolution via product page

Caption: Operating principle of a Vertically Aligned (VA) mode display.

Bicyclohexane Liquid Crystals: A Superior Material Class for VA Applications

© 2026 BenchChem. All rights reserved.

The performance of a VA-LCD, particularly its response time, is critically dependent on the rotational viscosity (γ_1) of the liquid crystal mixture.[7][8] A lower rotational viscosity allows the molecules to reorient more quickly when the electric field is applied or removed, enabling higher refresh rates essential for gaming and motion-clarity.[9][10] Bicyclohexane-based liquid crystals are specifically engineered to address this need.

Key Molecular Features and Structure-Property Relationships:

The core of these molecules consists of two cyclohexane rings. Unlike aromatic rings (like biphenyls), these saturated aliphatic rings lead to significantly different intermolecular interactions.

- Low Rotational Viscosity (γ_1): The absence of delocalized π-electrons in the bicyclohexane core reduces the strong π-π stacking interactions that are common in purely aromatic LCs.[11] This weaker intermolecular attraction results in a lower energy barrier for molecular rotation, manifesting as a significantly lower rotational viscosity. This is the primary advantage of this material class for achieving fast-switching displays.[9][12]

- High Clearing Point (Stability): Despite weaker π-π interactions, the rigid, rod-like shape of the bicyclohexane structure provides excellent shape anisotropy, which is crucial for maintaining the nematic phase over a wide temperature range. This results in high clearing points (the temperature of the nematic-to-isotropic phase transition), ensuring stable operation in demanding applications like automotive displays or outdoor signage.

- Low Birefringence (Δn): The lack of a highly conjugated π-electron system means that bicyclohexane LCs typically exhibit low to moderate optical anisotropy (birefringence).[13][14] While very high birefringence is sometimes desired, a moderate Δn is often advantageous for VA modes as it allows for a thicker cell gap (d) while maintaining the optimal phase retardation (Δn·d), making manufacturing processes more robust.

- High Negative Dielectric Anisotropy (Δε): When appropriately substituted with lateral fluorine atoms, bicyclohexane compounds can achieve a strongly negative dielectric anisotropy, which is essential for low-voltage operation in VA displays.[13]

© 2026 BenchChem. All rights reserved.

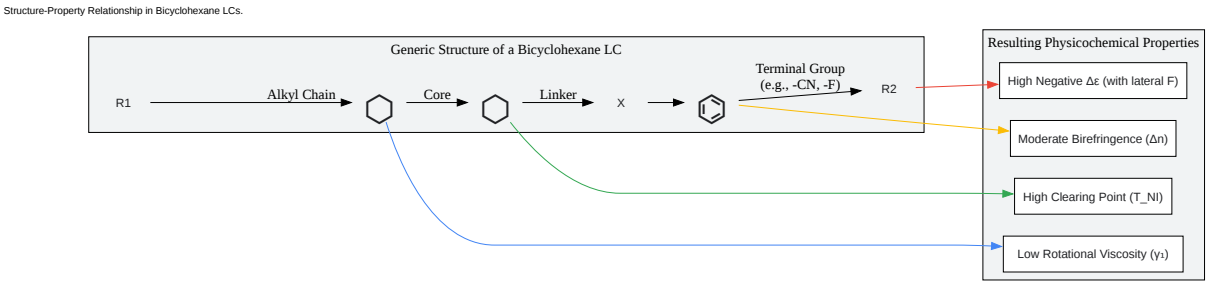

Click to download full resolution via product page

Caption: Structure-Property Relationship in Bicyclohexane LCs.

Table 1: Comparative Physical Properties of Example Liquid Crystal Compounds

Compound Type	Structure Example	Typical Δε (at 20°C)	Typical Δn (at 589 nm, 20°C)	Typical γ_1 (mPa·s at 20°C)
Bicyclohexane	CCH-3F.F.F	~ -4.5	~ 0.08	~ 80
Biphenyl	5CB (Positive Δε)	~ +11.5	~ 0.18	~ 100
Terphenyl	T15 (Positive Δε)	~ +2.0	~ 0.22	~ 220

Note: Data is representative and compiled from various sources for illustrative purposes. Actual values vary with specific molecular structure and measurement conditions.[13]

© 2026 BenchChem. All rights reserved.

Protocol: Formulation of a Bicyclohexane-Based LC Mixture for VA Displays

No single liquid crystal compound can satisfy all the stringent requirements for a modern display, such as a wide operating temperature range, low viscosity, and specific electro-optical characteristics.[3][15] Therefore, formulating a multi-component eutectic mixture is a standard and necessary practice.

3.1. Rationale and Strategy for Formulation

The goal is to create a mixture that exhibits a stable nematic phase from at least -20°C to +80°C while optimizing for low threshold voltage (Vth), fast response time (τ), and high resistivity. This is achieved by combining several components, each contributing specific properties:

- Host Components: A base of two to three low-viscosity bicyclohexane compounds to form the eutectic base, ensuring a broad nematic range and low overall viscosity.
- High Δε Component: A component with a strongly negative dielectric anisotropy is added to reduce the driving voltage. This component may have higher viscosity, so its concentration must be carefully optimized.
- Birefringence Modifier: A component may be added to fine-tune the overall Δn of the mixture to match the desired cell gap for optimal optical performance.

3.2. Step-by-Step Formulation Protocol

Materials & Equipment:

- High-purity (>99.8%) liquid crystal components.
- Analytical balance (±0.01 mg).
- Small glass vials with PTFE-lined caps.
- Vortex mixer and/or ultrasonic bath.

© 2026 BenchChem. All rights reserved.

- Heating plate or oven capable of maintaining isotropic phase temperature.
- Inert gas (Nitrogen or Argon).

Procedure:

- Calculation: Determine the weight percentage (wt%) of each component for the target mixture (e.g., 40% Component A, 35% Component B, 25% Component C). Calculate the required mass of each component for the total desired volume (e.g., 500 mg).
- Weighing: Tare a clean, dry glass vial on the analytical balance. Precisely weigh each liquid crystal component directly into the vial according to the calculated masses.
  - Expert Insight: It is crucial to perform weighing in a controlled environment to minimize contamination from dust or moisture, which can degrade the mixture's resistivity.
- Mixing: Tightly cap the vial. Heat the vial on a hotplate to a temperature approximately 10°C above the clearing point of the highest-melting component. This brings the entire mixture into the isotropic liquid phase, ensuring complete miscibility.
- Homogenization: Once in the isotropic phase, vigorously mix the components using a vortex mixer for 2-3 minutes. Alternatively, place the vial in an ultrasonic bath for 10-15 minutes. This step is critical to ensure a perfectly homogeneous mixture at the molecular level.
- Cooling and Storage: Allow the mixture to cool slowly to room temperature. The mixture should now be in its nematic phase. For long-term storage, flush the vial with an inert gas like nitrogen before sealing to prevent oxidation and store it in a cool, dark place.
  - Self-Validation: A properly formulated mixture will appear uniform and clear in the nematic phase, without any signs of phase separation or crystallization. Its clearing point should be sharp and reproducible upon repeated heating and cooling cycles as verified by differential scanning calorimetry (DSC) or polarized optical microscopy.

Protocol: Characterization of the VA Liquid Crystal Mixture and Display Cell

© 2026 BenchChem. All rights reserved.

This section outlines the workflow for fabricating a test cell and measuring the key electro-optical parameters of the formulated mixture.

4.1. Preparation of a VA Test Cell

- Substrate Cleaning: Thoroughly clean two ITO-coated glass substrates using a sequence of solvents (e.g., Alconox, deionized water, acetone, isopropanol) in an ultrasonic bath. Dry the substrates with a nitrogen gun.
- Alignment Layer Coating: Spin-coat a vertical alignment polyimide (PI) layer onto the ITO side of each substrate.[16]
- Baking/Curing: Bake the PI-coated substrates in an oven according to the manufacturer's specifications (e.g., a soft bake at ~80°C followed by a hard bake at ~180-200°C) to cure the polymer.
- Rubbing (Optional but Recommended): Gently rub the PI surface with a velvet cloth in a single direction. This creates a small pre-tilt angle (~2-4° from the vertical), which is crucial for ensuring a uniform and defect-free switching direction of the LC molecules when the field is applied.[17]
- Cell Assembly: Assemble the two substrates with the PI layers facing each other. Use UV-curable sealant containing spacer beads (e.g., 3.5 µm) to define the cell gap. Expose to UV light to cure the sealant.
- Cell Filling: Fill the empty cell with the formulated LC mixture via capillary action in a vacuum chamber. The filling process should be done at a temperature where the LC is in its isotropic phase to reduce viscosity and prevent flow-induced alignment defects.

4.2. Measurement of Electro-Optical Properties

The following measurements are typically performed by placing the filled test cell in an automated liquid crystal parameter tester, which combines a polarizing microscope, a light source, a photodetector, a function generator, and a temperature controller.

- Threshold Voltage (Vth) and Transmittance vs. Voltage (T-V Curve): Apply a square-wave AC voltage (e.g., 1 kHz) across the cell, slowly increasing the amplitude. Record the transmitted

© 2026 BenchChem. All rights reserved.

light intensity with a photodetector. Vth is typically defined as the voltage at which 10% of the maximum transmission is achieved.

- Response Time (τ_on, τ_off): Apply a voltage to switch the cell to its ON state and measure the time taken for the transmittance to rise from 10% to 90% (τ_on). Then, remove the voltage and measure the time taken for the transmittance to fall from 90% to 10% (τ_off). Low rotational viscosity is the key to minimizing τ_off.[18]

- Rotational Viscosity (γ_1): Can be determined from the transient current method or calculated from the decay time (τ_off) using the equation: $\tau_off \approx (\gamma_1 * d^2) / (K_{33} * \pi^2)$, where d is the cell gap and K_{33} is the bend elastic constant.[8][19]

- Dielectric Anisotropy (Δε): Measured using a capacitance bridge. The capacitance of the cell is measured with the LC molecules in the vertical state (C⊥, at 0V) and in the tilted, planar-like state (C∥, at a high voltage). Δε can then be calculated from these values and the cell geometry.

© 2026 BenchChem. All rights reserved.

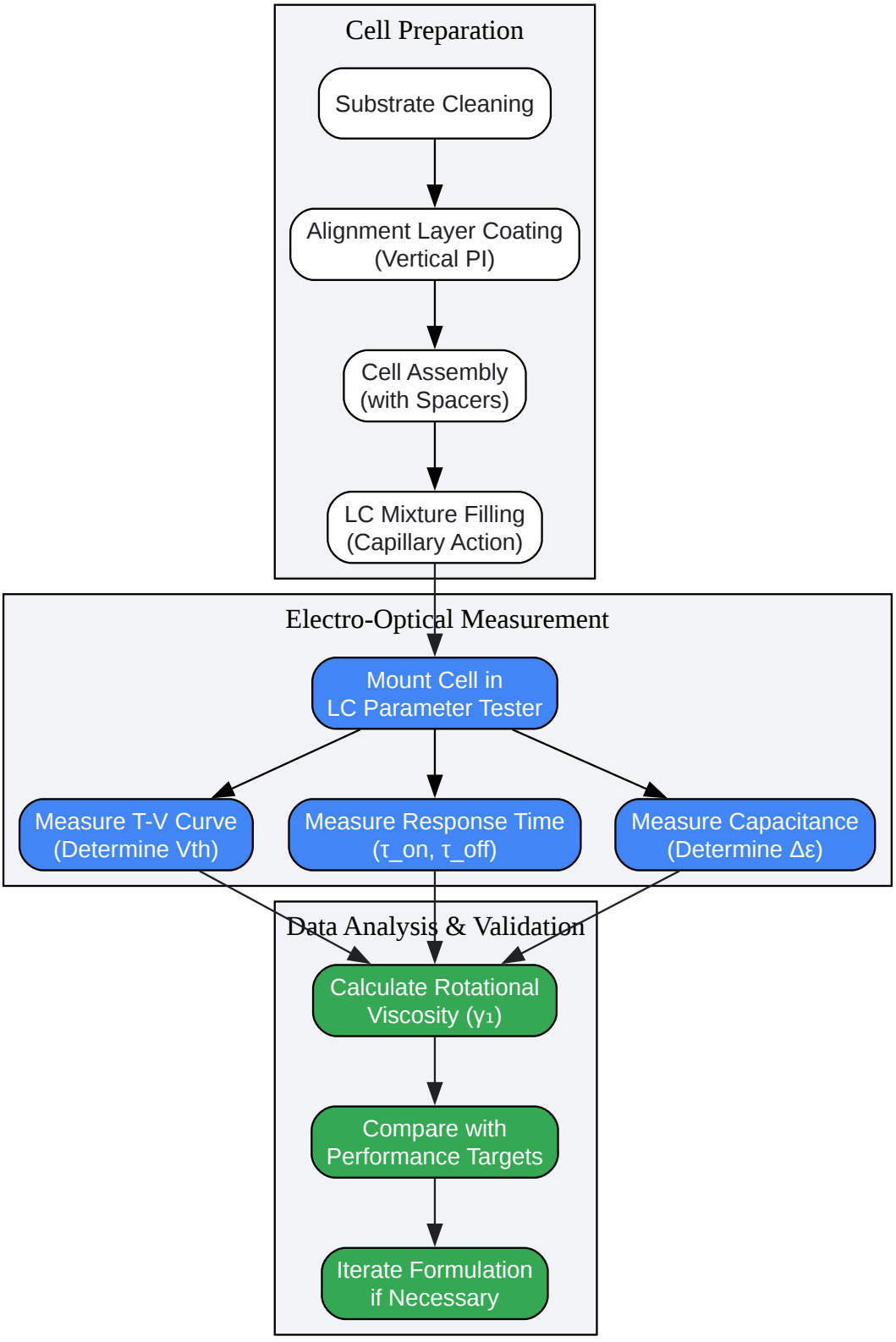

Click to download full resolution via product page

Caption: Experimental workflow for VA cell characterization.

© 2026 BenchChem. All rights reserved.

Conclusion

Bicyclohexane-based nematic liquid crystals represent a cornerstone in the development of advanced Vertically Aligned mode displays. Their unique molecular structure provides an unparalleled combination of low rotational viscosity for fast switching speeds and high chemical and thermal stability for robust performance. By understanding the fundamental structure-property relationships and employing systematic formulation and characterization protocols as detailed in this guide, researchers can effectively engineer and validate novel liquid crystal mixtures that push the boundaries of display performance, meeting the demands for higher resolution, faster refresh rates, and superior image quality in next-generation electronic devices.

References

- Current time information in Isle of Wight County, US. Google.
- Vertical alignment (VA) technologies for LCD. EMDGroup.com.
- Vertical alignment (VA) technologies for LCD. EMDGroup.com.
- Vertical Alignment (VA) - Liquid Crystal. Alfa Chemistry.
- A Fast-Response Vertical-Alignment In-Plane-Switching-Mode Liquid Crystal Display. MDPI.
- Synthesis of organic liquid crystals containing selectively fluorinated cyclopropanes. Beilstein Journal of Organic Chemistry.
- VA Displays: The Future of High-Contrast LCD Technology. News.
- CHARACTERIZATION OF LIQUID CRYSTALS: A LITERATURE REVIEW. ResearchGate.
- The role of negative dielectric anisotropy liquid crystalline materials in LCD's. Shodhganga.
- VA - Vertical Alignment. Anders Electronics.
- Vertical Alignment of Liquid Crystal on Sustainable 2,4-Di-tert-butylphenoxymethyl-Substituted Polystyrene Films. National Institutes of Health.
- Polymer Stabilized VA Mode Liquid Crystal Display. ResearchGate.
- LIQUID CRYSTAL MATERIALS AND LIQUID CRYSTAL DISPLAYS. Massachusetts Institute of Technology.
- Liquid Crystal Dimers Based on Seven-Membered Bridged Stilbene Exhibiting Twist-Bend Nematic Phases. MDPI.
- Development of liquid crystal displays and related improvements to their performances. J-STAGE.
- Liquid Crystal Materials. TCI Chemicals.
- The synthesis of new liquid–crystalline mesogens containing bicyclohexane units. ResearchGate.

© 2026 BenchChem. All rights reserved.

- Structure–property correlation of bicyclohexane nematic liquid crystals. Taylor & Francis Online.
- Recent progress in liquid crystal devices and materials of TFT-LCDs. Taylor & Francis Online.
- Sub-millisecond switching of multi-level liquid crystal on silicon spatial light modulators for increased information bandwidth. Optica Publishing Group.
- Cyclohexane compound and liquid crystal composition containing said compound. Google Patents.
- Schematic illustrations for the fabrication of the PS-VA mode. ResearchGate.
- Determination of Rotational Viscosity in Nematic Liquid Crystals from Transient Current: Numerical Analysis and Experiment. ResearchGate.
- Advanced liquid-crystal materials for TFT monitor and TV applications. ResearchGate.
- High Performance Negative Dielectric Anisotropy Liquid Crystals for Display Applications. MDPI.
- Phase Transitions and Physical Properties of a Binary Mixture of Bicyclohexane Compounds, I: Refractive Index Measurements. Taylor & Francis Online.
- Negative Dielectric Anisotropy Liquid Crystal with Improved Photo-Stability, Anti-Flicker, and Transmittance for 8K Display Applications. National Institutes of Health.
- Chemical vapor deposition. Wikipedia.
- Study on the Structure and Liquid Crystal Behavior of Cyclohexane Liquid Crystal Monomer. ResearchGate.
- Formulation of Novel Liquid Crystal (LC) Formulations with Skin-Permeation-Enhancing Abilities of Plantago lanceolata (PL) Extract and Their Assessment on HaCaT Cells. National Institutes of Health.
- Rotational viscosity and molecular structure of nematic liquid crystals. Journal of Applied Physics.
- Advanced liquid crystal materials with negative dielectric anisotropy for monitor and TV applications. ResearchGate.
- Thermotropic liquid crystals for precision drug delivery and diagnostics: Molecular design, characterization, and clinical trans. Elsevier.
- Role of voltage-controlled magnetic anisotropy in the recent development of magnonics and spintronics. Journal of Applied Physics.

Need Custom Synthesis?

BenchChem offers custom synthesis for rare earth carbides and specific isotopiclabeling.

Email: info@benchchem.com or Request Quote Online.

Sources

- 1. liqcryst.alfa-chemistry.com [liqcryst.alfa-chemistry.com]
- 2. News - VA Displays: The Future of High-Contrast LCD Technology [hemoled.com]
- 3. researchgate.net [researchgate.net]
- 4. Vertical alignment (VA) technologies for LCD [merckgroup.com]
- 5. Vertical alignment (VA) technologies for LCD [emdgroup.com]
- 6. VA - Vertical Alignment | Anders Electronics [andersdx.com]
- 7. web.mit.edu [web.mit.edu]
- 8. tandfonline.com [tandfonline.com]
- 9. mdpi.com [mdpi.com]
- 10. tandfonline.com [tandfonline.com]
- 11. ipme.ru [ipme.ru]
- 12. researchgate.net [researchgate.net]
- 13. surajitdhara.in [surajitdhara.in]
- 14. researchgate.net [researchgate.net]
- 15. Development of liquid crystal displays and related improvements to their performances - PMC [pmc.ncbi.nlm.nih.gov]
- 16. Vertical Alignment of Liquid Crystal on Sustainable 2,4-Di-tert-butylphenoxymethyl-Substituted Polystyrene Films - PMC [pmc.ncbi.nlm.nih.gov]
- 17. researchgate.net [researchgate.net]
- 18. OPG [opg.optica.org]
- 19. researchgate.net [researchgate.net]

- To cite this document: BenchChem. [application of bicyclohexanes in vertically aligned (VA) mode displays]. BenchChem, [2026]. [Online PDF]. Available at: [https://www.benchchem.com/product/b1591827#application-of-bicyclohexanes-in-vertically-aligned-va-mode-displays]

Disclaimer & Data Validity:

© 2026 BenchChem. All rights reserved.

The information provided in this document is for Research Use Only (RUO) and is strictly not intended for diagnostic or therapeutic procedures. While BenchChem strives to provide accurate protocols, we make no warranties, express or implied, regarding the fitness of this product for every specific experimental setup.

Technical Support: The protocols provided are for reference purposes. Unsure if this reagent suits your experiment? [Contact our Ph.D. Support Team for a compatibility check]

Need Industrial/Bulk Grade? Request Custom Synthesis Quote

BenchChem

Our mission is to be the trusted global source of essential and advanced chemicals, empowering scientists and researchers to drive progress in science and industry.

Contact

Address: 3281 E Guasti Rd

Ontario, CA 91761, United States

Phone: (601) 213-4426

Email: info@benchchem.com

© 2026 BenchChem. All rights reserved.