Application Notes: Development of a Radioimmunoassay for PHI-27

Author: BenchChem Technical Support Team. **Date**: April 2026

Compound of Interest

Compound Name:	*PHI-27 (porcine)*
CAS No.:	*80458-29-3*
Cat. No.:	*B1591597*

Get Quote

Introduction

Peptide Histidine Isoleucine (PHI-27) is a 27-amino acid peptide hormone belonging to the glucagon/secretin superfamily, which also includes vasoactive intestinal peptide (VIP), pituitary adenylate cyclase-activating polypeptide (PACAP), and glucagon.[1][2] Originally isolated from porcine intestine, PHI-27 (and its human analogue, PHI-methionine or PHM) is widely distributed throughout the central and peripheral nervous systems.[1][3] It plays a significant role in various physiological processes, including the regulation of intestinal secretion, smooth muscle relaxation, and the release of other hormones like prolactin.[1] Given its diverse functions, the accurate quantification of PHI-27 in biological samples is crucial for research in gastroenterology, endocrinology, and neuroscience.

Radioimmunoassay (RIA) is a highly sensitive and specific in vitro technique ideal for measuring picogram quantities of peptide hormones in complex biological fluids. The principle of RIA is based on the competition between a radiolabeled antigen (tracer) and an unlabeled antigen (standard or sample) for a limited number of binding sites on a specific antibody. This application note provides a detailed protocol for the development and validation of a competitive RIA for PHI-27.

© 2026 BenchChem. All rights reserved.

Principle of the PHI-27 Radioimmunoassay

The assay relies on the competitive binding principle. A fixed amount of ^{125}I-labeled PHI-27 and a specific anti-PHI-27 antibody are incubated with either a known amount of unlabeled PHI-27 standard or an unknown sample. The unlabeled PHI-27 from the standard or sample competes with the ^{125}I-PHI-27 for the limited antibody binding sites. As the concentration of unlabeled PHI-27 increases, the amount of ^{125}I-PHI-27 bound to the antibody decreases. After separating the antibody-bound fraction from the free fraction, the radioactivity of the bound complex is measured. The concentration of PHI-27 in the unknown sample is then determined by comparing the results to a standard curve.

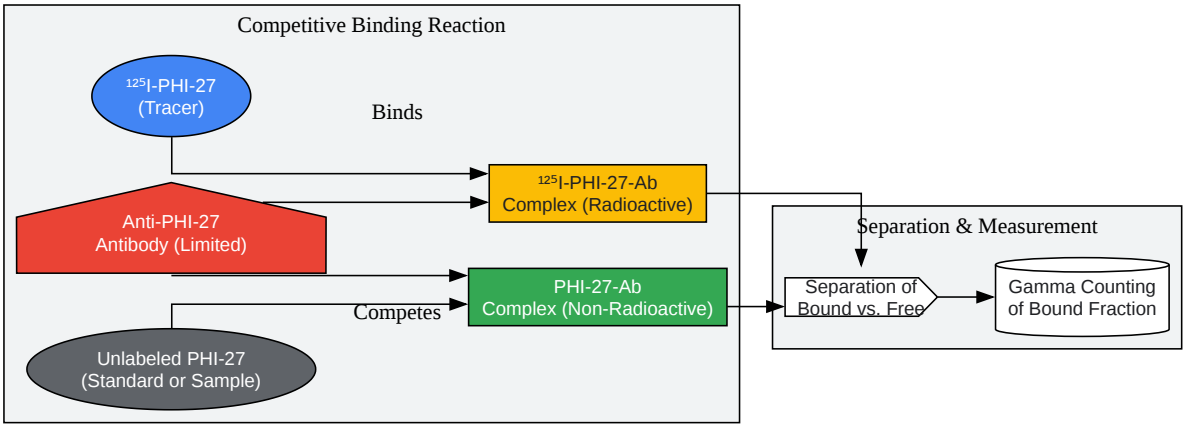

Click to download full resolution via product page

Caption: Principle of the competitive radioimmunoassay for PHI-27.

Detailed Protocols

Materials and Reagents

- PHI-27 Standard: Synthetic porcine PHI-27 (e.g., from Phoenix Pharmaceuticals or similar), lyophilized.

© 2026 BenchChem. All rights reserved.

- Anti-PHI-27 Antiserum: Polyclonal antibody raised in rabbits against PHI-27 conjugated to a carrier protein.
- ^{125}I-PHI-27 Tracer: Radiolabeled PHI-27 (prepared in-house or purchased).
- Sodium Iodide ($Na^{125}I$): High specific activity, carrier-free.
- Chloramine-T: For radiolabeling.
- Sodium Metabisulfite: To stop the labeling reaction.
- RIA Buffer: 0.05 M Phosphate buffer, pH 7.4, containing 0.1% Bovine Serum Albumin (BSA), 0.01% NaN_3.
- Second Antibody: Goat anti-rabbit IgG.
- Carrier Serum: Normal rabbit serum (NRS).
- Precipitating Reagent: Polyethylene Glycol (PEG), 6000 MW.
- Separation Columns: Sephadex G-50 or equivalent for tracer purification.
- Reagent Grade Water (Milli-Q or equivalent).
- Standard laboratory equipment: Vortex mixer, centrifuge, gamma counter, polypropylene assay tubes.

Protocol: Radiolabeling of PHI-27 with ^{125}I (Chloramine-T Method)

Caution: This procedure involves radioactive materials and must be performed in a certified fume hood by licensed personnel following all institutional safety protocols.

- Reagent Preparation:
  - Dissolve 10 µg of synthetic PHI-27 in 10 µL of 0.01 M HCl.
  - Prepare fresh Chloramine-T solution (1 mg/mL in 0.05 M phosphate buffer, pH 7.5).

© 2026 BenchChem. All rights reserved.

- Prepare fresh Sodium Metabisulfite solution (1 mg/mL in 0.05 M phosphate buffer, pH 7.5).

- Iodination Reaction:
  - To the 10 µg of PHI-27, add 25 µL of 0.5 M phosphate buffer, pH 7.5.
  - Add 1 mCi of $Na^{125}I$. Mix gently.
  - Initiate the reaction by adding 10 µL of Chloramine-T solution.
  - Incubate for 60 seconds at room temperature with gentle tapping.
  - Stop the reaction by adding 20 µL of sodium metabisulfite solution.
  - Add 100 µL of 1% KI solution as a carrier.
- Purification of ^{125}I-PHI-27:
  - Equilibrate a Sephadex G-50 column (1x30 cm) with RIA buffer.
  - Apply the reaction mixture to the top of the column.
  - Elute with RIA buffer, collecting 0.5 mL fractions.
  - Measure the radioactivity of each fraction in a gamma counter.
  - Two peaks of radioactivity will be observed. The first, larger peak contains the protein-bound ^{125}I-PHI-27, while the second peak contains free, unreacted ^{125}I.
  - Pool the fractions from the center of the first peak.
  - Assess immunoreactivity by testing the tracer's ability to bind to an excess of the primary antibody (should be >80%).
  - Store aliquots of the purified tracer at -20°C.

Protocol: Radioimmunoassay Procedure (Double-Antibody Method)

© 2026 BenchChem. All rights reserved.

The double-antibody separation technique is a common and reliable method for precipitating the antigen-antibody complex.

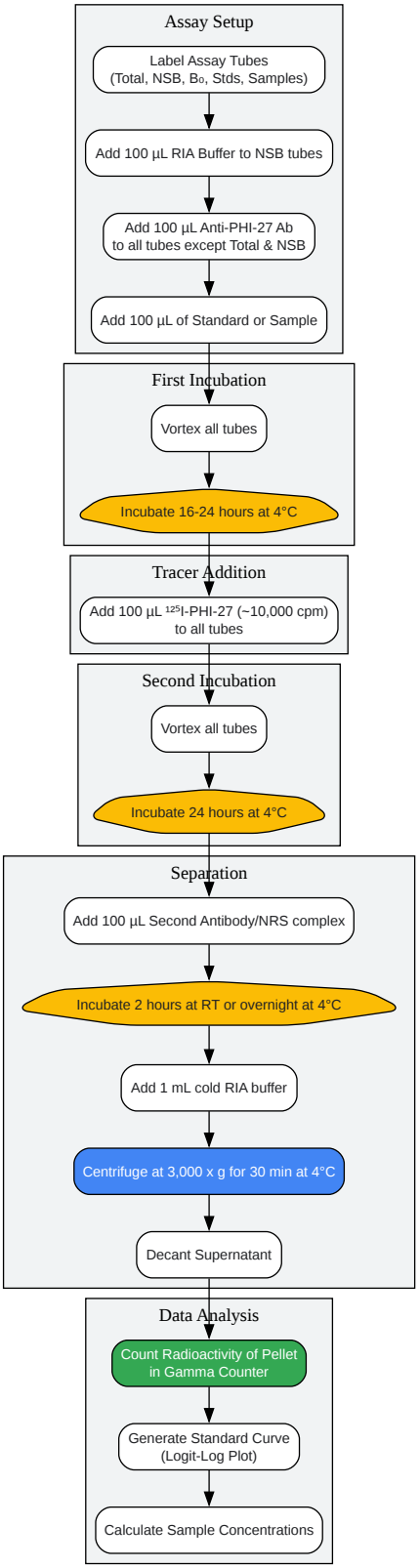

© 2026 BenchChem. All rights reserved.

Click to download full resolution via product page

Caption: Experimental workflow for the PHI-27 double-antibody RIA.

- Assay Setup:
  - Set up polypropylene tubes in duplicate for Total Counts (TC), Non-Specific Binding (NSB), Zero Standard (B_0), Standards (S1-S7), and Unknown Samples (U).
  - Add reagents to the tubes according to the layout in Table 1.
  - Step 1: Pipette 100 µL of standard or sample into the appropriate tubes.
  - Step 2: Pipette 100 µL of RIA buffer into the NSB tubes.
  - Step 3: Pipette 100 µL of diluted primary anti-PHI-27 antibody into all tubes except TC and NSB.
  - Vortex all tubes and incubate for 16-24 hours at 4°C.
- Tracer Addition and Incubation:
  - Step 4: Add 100 µL of ^{125}I-PHI-27 (diluted in RIA buffer to ~10,000 cpm/100 µL) to all tubes.
  - Vortex all tubes and incubate for another 24 hours at 4°C.
- Separation of Bound and Free Antigen:
  - Step 5: Add 100 µL of the pre-titered second antibody (e.g., goat anti-rabbit IgG) to all tubes except TC.
  - Vortex and incubate for 2 hours at room temperature or overnight at 4°C to form a precipitate.
  - Step 6: Add 1 mL of cold RIA buffer to all tubes except TC to wash the precipitate.
  - Step 7: Centrifuge all tubes (except TC) at 3,000 x g for 30 minutes at 4°C.

© 2026 BenchChem. All rights reserved.

- Step 8: Carefully decant or aspirate the supernatant, leaving the radioactive pellet at the bottom.

- Data Acquisition and Analysis:
  - Count the radioactivity (cpm) of the pellet in each tube for 1 minute using a gamma counter.
  - Calculate the average cpm for each duplicate pair.
  - Calculate the percentage of tracer bound (%B/B_0) for each standard and sample using the formula: %B/B_0 = [(Avg. cpm_Standard/Sample - Avg. cpm_NSB) / (Avg. cpm_B_0 - Avg. cpm_NSB)] * 100
  - Plot a standard curve of %B/B_0 versus the concentration of the PHI-27 standards on a logit-log scale.
  - Determine the concentration of PHI-27 in the unknown samples by interpolation from the standard curve.

Data Presentation and Assay Validation

Table 1: Typical RIA Pipetting Scheme

Tube ID	RIA Buffer (µL)	Standard/Sample (µL)	Primary Ab (µL)	^{125}I-PHI-27 (µL)	Second Ab (µL)
Total Counts	-	-	-	100	-
NSB	200	-	-	100	100
B_0 (Zero Std)	100	100 (Std 0)	100	100	100
Standards	-	100	100	100	100
Samples	-	100	100	100	100

Table 2: Example Standard Curve Data

© 2026 BenchChem. All rights reserved.

Standard	PHI-27 (pg/mL)	Avg. CPM	CPM - NSB	% B/B₀
NSB	-	350	-	-
B₀	0	5,150	4,800	100.0
S1	10	4,670	4,320	90.0
S2	25	3,950	3,600	75.0
S3	50	3,000	2,650	55.2
S4	100	2,030	1,680	35.0
S5	250	1,250	900	18.8
S6	500	830	480	10.0
S7	1000	590	240	5.0

Table 3: Assay Performance Characteristics

Parameter	Result	Acceptance Criteria
Sensitivity (LOD)	8 pg/mL	-
Mid-point (ED₅₀)	~75 pg/mL	-
Intra-assay Precision	5.8% CV	< 10% CV
Inter-assay Precision	9.2% CV	< 15% CV
Spike & Recovery	92-105%	85-115%
Linearity of Dilution	$R^2 > 0.99$	$R^2 > 0.98$
Cross-reactivity		
- VIP	< 0.1%	< 1%
- Secretin	< 0.01%	< 0.1%
- Glucagon	< 0.01%	< 0.1%

PHI-27 Signaling Pathway Overview

© 2026 BenchChem. All rights reserved.

PHI-27 exerts its biological effects by binding to G protein-coupled receptors (GPCRs). It shares high structural homology with VIP and can bind to VIP receptors (VPAC1 and VPAC2), though often with different affinities. It may also interact with PACAP-preferring receptors (PAC1). Upon binding, these receptors typically couple to Gαs proteins, leading to the activation of adenylyl cyclase (AC). This enzyme catalyzes the conversion of ATP to cyclic AMP (cAMP), which in turn activates Protein Kinase A (PKA). PKA then phosphorylates various downstream targets to elicit a cellular response, such as smooth muscle relaxation or hormone secretion.

© 2026 BenchChem. All rights reserved.

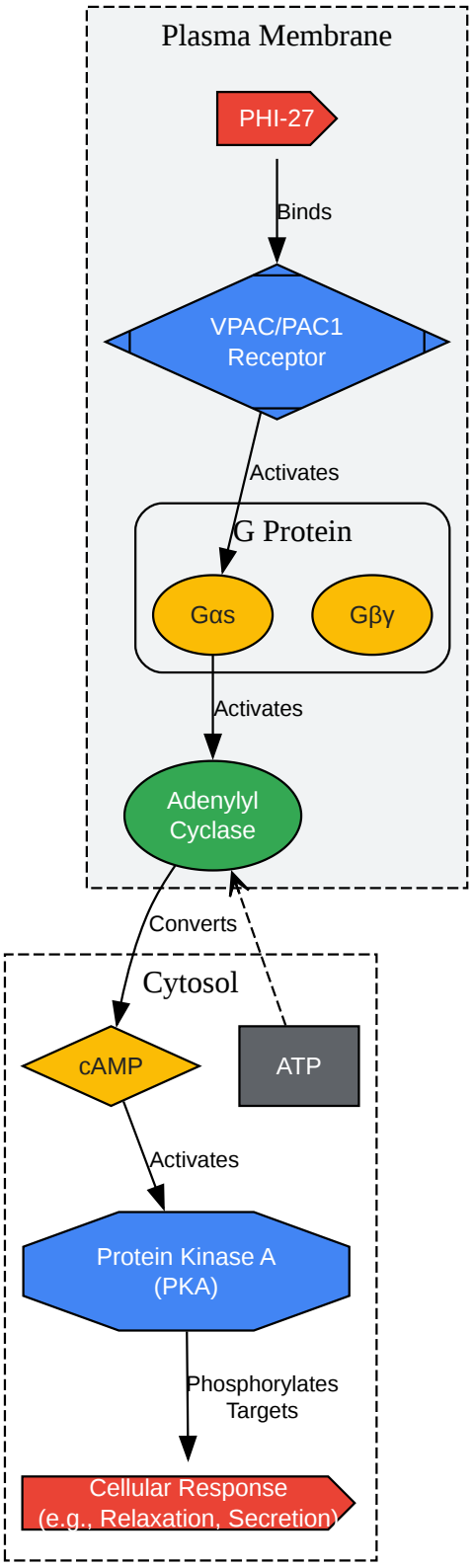

Click to download full resolution via product page

© 2026 BenchChem. All rights reserved.

Need Custom Synthesis?

BenchChem offers custom synthesis for rare earth carbides and specific isotopiclabeling.

Email: info@benchchem.com or Request Quote Online.

References

- 1. Peptide PHI - Wikipedia [en.wikipedia.org]
- 2. Isolation and characterization of the intestinal peptide porcine PHI (PHI-27), a new member of the glucagon--secretin family - PubMed [pubmed.ncbi.nlm.nih.gov]
- 3. [Peptide histidine-isoleucine and and its human analogue peptide histidine-methionine: localization, receptors and biological function] - PubMed [pubmed.ncbi.nlm.nih.gov]
- To cite this document: BenchChem. [Application Notes: Development of a Radioimmunoassay for PHI-27]. BenchChem, [2026]. [Online PDF]. Available at: [https://www.benchchem.com/product/b1591597/docs#application-notes-development-of-a-radioimmunoassay-for-phi-27]

Disclaimer & Data Validity:

The information provided in this document is for Research Use Only (RUO) and is strictly not intended for diagnostic or therapeutic procedures. While BenchChem strives to provide accurate protocols, we make no warranties, express or implied, regarding the fitness of this product for every specific experimental setup.

Technical Support: The protocols provided are for reference purposes. Unsure if this reagent suits your experiment?

Need Industrial/Bulk Grade? Request Custom Synthesis Quote

BenchChem

Our mission is to be the trusted global source of essential and advanced chemicals, empowering scientists and researchers to drive progress in science and industry.

Contact

Address: 3281 E Guasti Rd

Ontario, CA 91761, United States

Phone: (601) 213-4426

Email: info@benchchem.com

Contact our Ph.D. Support Team for a compatibility check

© 2026 BenchChem. All rights reserved.