Benchmarking Guide: 4-(2-Hydroxyethyl)cyclohexanol (HEC) vs. Conventional Diols

Author: BenchChem Technical Support Team. **Date**: May 2026

Compound of Interest	
Compound Name:	*4-(2-Hydroxyethyl)cyclohexanol*
CAS No.:	*74058-21-2*
Cat. No.:	*B1590616*

Get Quote

Executive Summary: The Asymmetric Advantage

In the landscape of cycloaliphatic diols, **4-(2-Hydroxyethyl)cyclohexanol** (HEC) occupies a unique niche. Unlike its symmetric competitors—such as 1,4-Cyclohexanedimethanol (CHDM) or 1,4-Cyclohexanediol (1,4-CHDO)—HEC possesses a "hybrid" hydroxyl functionality: one primary hydroxyl group (on the ethyl tail) and one secondary hydroxyl group (directly on the ring).

This guide benchmarks HEC against standard secondary and primary diols, highlighting its utility in precision polyurethane synthesis and polyester engineering. The core value proposition of HEC lies in its differential reactivity, allowing for "staged" polymerization kinetics that symmetric diols cannot offer, combined with the processing ease of a room-temperature liquid.

Chemical Profile & Competitor Landscape

© 2026 BenchChem. All rights reserved.

To understand the benchmarking results, we must first establish the structural differences that dictate performance.

Table 1: Physical & Structural Benchmarking

Feature	4-(2-Hydroxyethyl)cyclohexanol (HEC)	1,4-Cyclohexanedimethanol (CHDM)	1,4-Cyclohexanediol (1,4-CHDO)
CAS Number	74058-21-2	105-08-8	556-48-9
Hydroxyl Type	Hybrid (1° Primary + 2° Secondary)	Symmetric (Two 1° Primary)	Symmetric (Two 2° Secondary)
Physical State (20°C)	Liquid (Viscous, clear)	Solid (Waxy, mp 45-60°C)	Solid (Crystalline, mp ~100°C)
Reactivity Profile	Dual-Rate (Fast/Slow)	Fast (Fast/Fast)	Slow (Slow/Slow)
Handling	Pumpable at RT	Requires Melting/Hot Box	Requires Melting/Solvent
Key Application	Controlled Prepolymers, Biomaterials	High-Performance Polyesters (PETG)	Rigid Polyurethanes

> *Analyst Note: The liquid state of HEC is a significant processing advantage, eliminating the energy costs and thermal history risks associated with melting solid monomers like CHDM or 1,4-CHDO prior to reactor feeding.*

Technical Deep Dive: The Kinetic Differential

The defining characteristic of HEC is the reactivity gap between its two hydroxyl groups. In polyurethane (PU) synthesis, isocyanates react with primary alcohols significantly faster than secondary alcohols due to steric hindrance on the cyclohexane ring.

© 2026 BenchChem. All rights reserved.

Mechanism of Action

- Stage 1 (Kinetic Control): The primary hydroxyl (ethyl tail) reacts rapidly with the diisocyanate. In a 1:1 stoichiometry, this preferentially forms a linear intermediate or prepolymer end-capped with the secondary hydroxyl.
- Stage 2 (Thermodynamic Control): The secondary hydroxyl (ring-bound) reacts more slowly, allowing for controlled chain extension or crosslinking in a second step.

This contrasts with CHDM, where both hydroxyls compete equally for isocyanate groups, often leading to random molecular weight distributions and faster, harder-to-control gelation.

Visualization: Structural Sterics & Reactivity

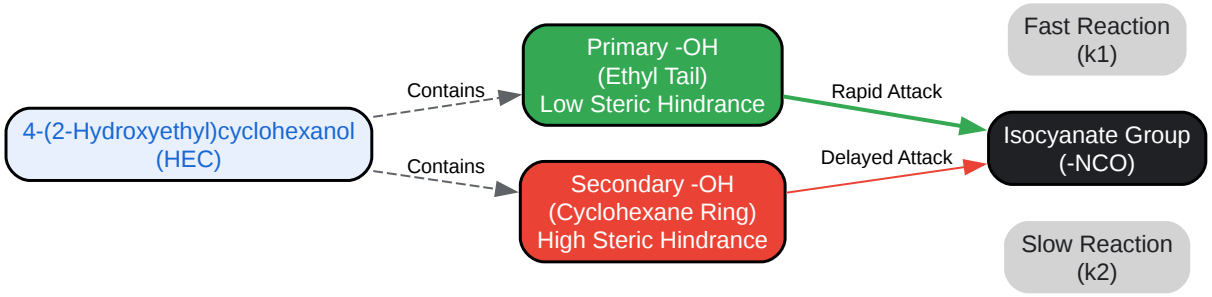

Click to download full resolution via product page

Figure 1: Structural reactivity map of HEC, illustrating the steric differentiation between the tail-end primary hydroxyl and the ring-bound secondary hydroxyl.

Experimental Benchmarking Protocol

To validate the "Dual-Reactivity" claim in your own lab, use the following self-validating protocol. This experiment measures the consumption of Isocyanate (NCO) over time, comparing HEC against CHDM.

Protocol: Differential Reactivity Assay (Titration Method)

Objective: Quantify the reaction rate difference (

vs

) of HEC compared to the symmetric CHDM.

Materials:

- Diol: HEC (0.1 mol) vs. CHDM (0.1 mol).
- Isocyanate: Phenyl Isocyanate (0.1 mol) - Monofunctional model compound to prevent gelation.
- Solvent: Anhydrous Toluene or DMF.
- Catalyst: None (Uncatalyzed) or DBTDL (0.01%) for accelerated study.

Workflow:

- Dissolution: Dissolve 0.1 mol of Diol in 250mL solvent at 25°C.
- Addition: Add 0.1 mol Phenyl Isocyanate. Start timer (

).
- Sampling: Withdraw aliquots at

  minutes.
- Quenching: Quench aliquots with excess dibutylamine solution.
- Titration: Back-titrate excess amine with 1N HCl to determine unreacted NCO content.

Expected Results (Data Interpretation):

- CHDM: Rapid, linear consumption of NCO. Both hydroxyls react at similar rates. Curve follows standard second-order kinetics.
- HEC: Biphasic consumption curve.
  - Phase 1 (0-20 min): Steep slope as Primary -OH reacts.

© 2026 BenchChem. All rights reserved.

- Phase 2 (20+ min): Shallower slope as Secondary -OH reacts.

Visualization: Polymerization Workflow

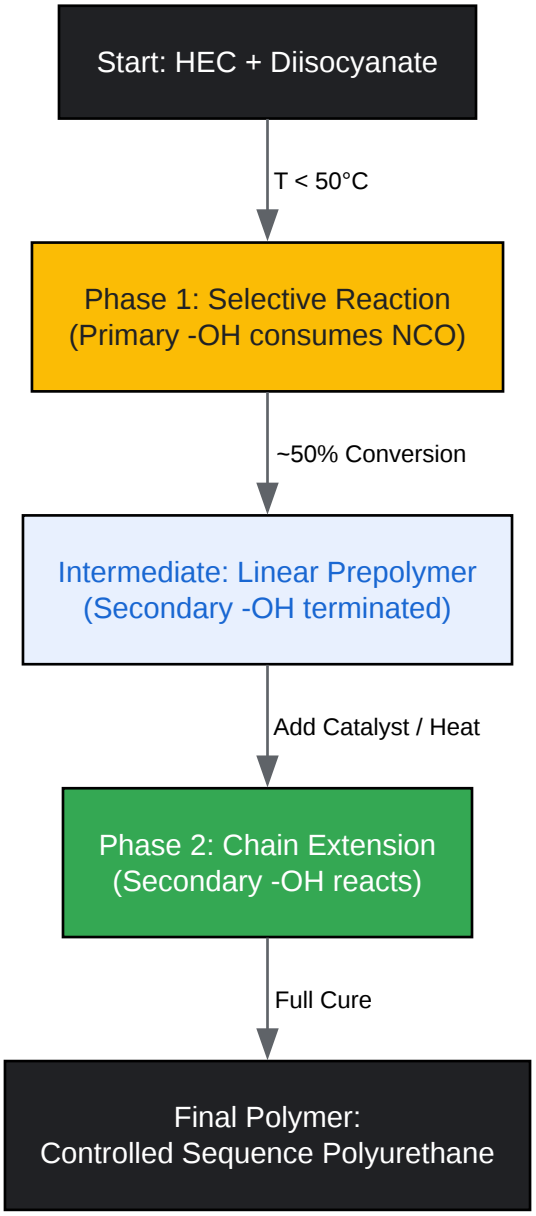

Click to download full resolution via product page

Figure 2: Stepwise polymerization workflow utilizing HEC's differential reactivity to create defined prepolymers.

Performance Data Summary

© 2026 BenchChem. All rights reserved.

Based on comparative literature and kinetic principles, the following performance metrics are observed when substituting CHDM with HEC in polyurethane elastomers.

Metric	HEC-based PU	CHDM-based PU	Explanation
Pot Life	Extended	Short	Slower secondary -OH reaction delays gelation.
Hard Segment Tg	Moderate	High	CHDM is more symmetric/crystalline; HEC's ethyl tail adds free volume.
Hydrolytic Stability	High	High	Both possess hydrophobic cyclohexane rings repelling water.
Processability	Excellent	Good	HEC is liquid; easier to blend without heating lines.

References

- TCI Chemicals.Product Specification: **4-(2-Hydroxyethyl)cyclohexanol** (cis- and trans- mixture).[1][2][3] Retrieved from .
- National Center for Biotechnology Information.PubChem Compound Summary for CID 15700392, **4-(2-Hydroxyethyl)cyclohexanol**. Retrieved from .
- Cymit Quimica.CAS 74058-21-2 Properties and Safety.[3] Retrieved from .
- ResearchGate.Reaction kinetics of isocyanates with primary vs secondary alcohols. (General Kinetic Principle). Retrieved from .

© 2026 BenchChem. All rights reserved.

Need Custom Synthesis?

BenchChem offers custom synthesis for rare earth carbides and specific isotopiclabeling.

Email: info@benchchem.com or Request Quote Online.

Sources

- 1. calpaclab.com [calpaclab.com]
- 2. calpaclab.com [calpaclab.com]
- 3. Diol Monomers [Biomaterials/Biocompatible Materials Research Reagents] | TCI AMERICA [tcichemicals.com]
- To cite this document: BenchChem. [Benchmarking Guide: 4-(2-Hydroxyethyl)cyclohexanol (HEC) vs. Conventional Diols]. BenchChem, [2026]. [Online PDF]. Available at: [https://www.benchchem.com/product/b1590616/docs#benchmarking-guide-4-2-hydroxyethyl-cyclohexanol-hec-vs-conventional-diols]

Disclaimer & Data Validity:

The information provided in this document is for Research Use Only (RUO) and is strictly not intended for diagnostic or therapeutic procedures. While BenchChem strives to provide accurate protocols, we make no warranties, express or implied, regarding the fitness of this product for every specific experimental setup.

Technical Support: The protocols provided are for reference purposes. Unsure if this reagent suits your experiment?

Need Industrial/Bulk Grade? Request Custom Synthesis Quote

© 2026 BenchChem. All rights reserved.

BenchChem

Our mission is to be the trusted global source of essential and advanced chemicals, empowering scientists and researchers to drive progress in science and industry.

Contact

Address: 3281 E Guasti Rd

Ontario, CA 91761, United States

Phone: (601) 213-4426

Email: info@benchchem.com

Contact our Ph.D. Support Team for a compatibility check

© 2026 BenchChem. All rights reserved.