Detecting Fleeting Silylenes: A Comparative Guide to UV-Vis Spectroscopy and Alternative Techniques

Author: BenchChem Technical Support Team. **Date**: May 2026

Compound of Interest

Compound Name:	*Silylene*
CAS No.:	*13825-90-6*
Cat. No.:	*B15895236*

Get Quote

For researchers, scientists, and drug development professionals navigating the challenging landscape of reactive intermediate detection, this guide provides an objective comparison of UV-Vis spectroscopy-based methods against other established techniques for the characterization of transient **silylene**s. Supported by experimental data, this document delves into the nuances of performance, offering a clear perspective for selecting the most appropriate analytical approach.

Transient **silylene**s, the silicon analogues of carbenes, are highly reactive intermediates pivotal in numerous chemical transformations. Their fleeting nature, however, presents a significant analytical challenge. Among the techniques employed for their detection and characterization, time-resolved UV-Vis spectroscopy, particularly when coupled with laser flash photolysis (LFP), has emerged as a powerful tool for studying their kinetics in solution. This guide compares the utility of LFP with UV-Vis detection against matrix isolation spectroscopy, another robust method for studying highly reactive species.

© 2026 BenchChem. All rights reserved.

Performance Comparison: UV-Vis Spectroscopy vs. Matrix Isolation

The choice of analytical technique for studying transient **silylene**s hinges on the specific research question, whether it be determining reaction kinetics in solution or detailed spectroscopic characterization of the isolated species. Below is a comparison of the data obtained for two common transient **silylene**s, dimethyl**silylene** ($SiMe_2$) and diphenyl**silylene** ($SiPh_2$), using both techniques.

Parameter	Dimethylsilylene ($SiMe_2$)	Diphenylsilylene ($SiPh_2$)
Detection Method	Laser Flash Photolysis (UV-Vis)	Matrix Isolation (UV-Vis)
Precursor	Dodecamethylcyclohexasilane	Not Specified
Solvent/Matrix	Hexane	Hydrocarbon Matrix
Absorption Maximum (λmax)	470 nm[1]	~460 nm
Lifetime (τ)	Nanoseconds to microseconds (quencher dependent)	Stable in matrix
Rate Constant (k, with CCl_4)	1.8×10^9 $M^{-1}s^{-1}$[1]	Not Applicable
Key Advantages	Direct measurement of reaction kinetics in solution.	High-resolution spectral data of isolated species.
Limitations	Spectral broadening in solution; lifetime limited by reactivity.	Not suitable for kinetic studies in solution.

Experimental Protocols

To provide a practical understanding of these techniques, detailed methodologies for the key experiments are outlined below.

Laser Flash Photolysis with Time-Resolved UV-Vis Detection

© 2026 BenchChem. All rights reserved.

This technique is ideal for generating transient **silylene**s in solution and monitoring their subsequent reactions in real-time.

Objective: To generate a transient **silylene** via photolysis of a suitable precursor and measure its UV-Vis absorption spectrum and reaction kinetics with a quenching agent.

Methodology:

- Sample Preparation: A solution of the **silylene** precursor (e.g., a cyclopolysilane) in a deoxygenated solvent (e.g., hexane) is prepared in a quartz cuvette. The concentration is adjusted to yield an optimal optical density at the excitation wavelength.
- Generation of **Silylene**: The sample is irradiated with a short, high-energy laser pulse (e.g., from a Nd:YAG or excimer laser) at a wavelength where the precursor absorbs.[1][2] This photolysis cleaves the precursor to generate the transient **silylene**.
- Transient Absorption Measurement: A second, lower-intensity light source (e.g., a xenon arc lamp) is passed through the sample, perpendicular to the excitation laser beam. This probe beam is directed to a monochromator and then to a fast detector (e.g., a photomultiplier tube or a CCD camera).
- Data Acquisition: The change in absorbance of the probe light as a function of time after the laser flash is recorded. By varying the wavelength of the probe light, a time-resolved absorption spectrum of the transient species can be constructed.
- Kinetic Analysis: To determine the reactivity of the **silylene**, a quenching agent is added to the solution. The decay of the transient absorption signal is monitored at various quencher concentrations. The pseudo-first-order rate constants are then plotted against the quencher concentration to obtain the second-order rate constant for the reaction.[1]

Matrix Isolation Spectroscopy

This technique allows for the trapping and spectroscopic characterization of highly reactive species at cryogenic temperatures.

Objective: To isolate a transient **silylene** in an inert matrix and obtain its high-resolution UV-Vis absorption spectrum.

© 2026 BenchChem. All rights reserved.

Methodology:

- Matrix Preparation: A mixture of the **silylene** precursor and a large excess of an inert gas (e.g., argon or nitrogen) is prepared in the gas phase.
- Deposition: This gas mixture is slowly deposited onto a cryogenic window (e.g., CsI or BaF_2) cooled to a very low temperature (typically 4-20 K) by a closed-cycle helium refrigerator.
- In Situ Generation of **Silylene**: The **silylene** can be generated in two ways:
  - Photolysis: The precursor, now trapped in the solid matrix, is irradiated with UV light from a suitable source (e.g., a mercury arc lamp or a laser) to generate the **silylene** in situ.
  - Co-deposition: Silicon atoms can be generated by laser ablation of a silicon target and co-deposited with a reactant (like H_2) in the matrix gas.[3]
- Spectroscopic Measurement: The UV-Vis absorption spectrum of the matrix-isolated species is then recorded using a spectrophotometer. The inert and rigid nature of the matrix prevents the reactive **silylene** from dimerizing or reacting with other species, allowing for detailed spectroscopic analysis.
- Annealing and Further Irradiation: The matrix can be slowly warmed (annealed) to allow for limited diffusion and reactions within the matrix, or subjected to further irradiation to study photochemical transformations of the isolated **silylene**.

Experimental and Logical Workflows

To visualize the process of transient **silylene** detection, the following diagrams illustrate the experimental workflow for laser flash photolysis and the logical relationship between the two primary detection methods.

© 2026 BenchChem. All rights reserved.

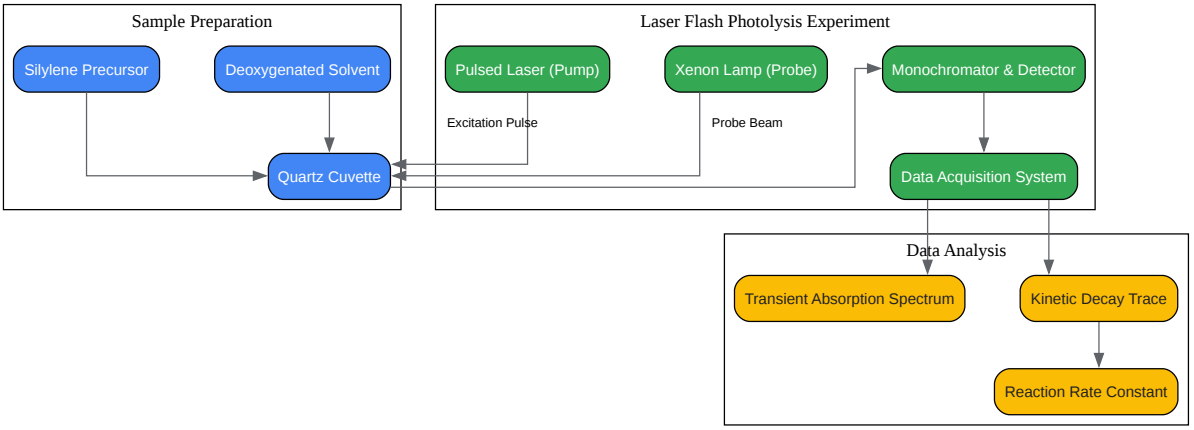

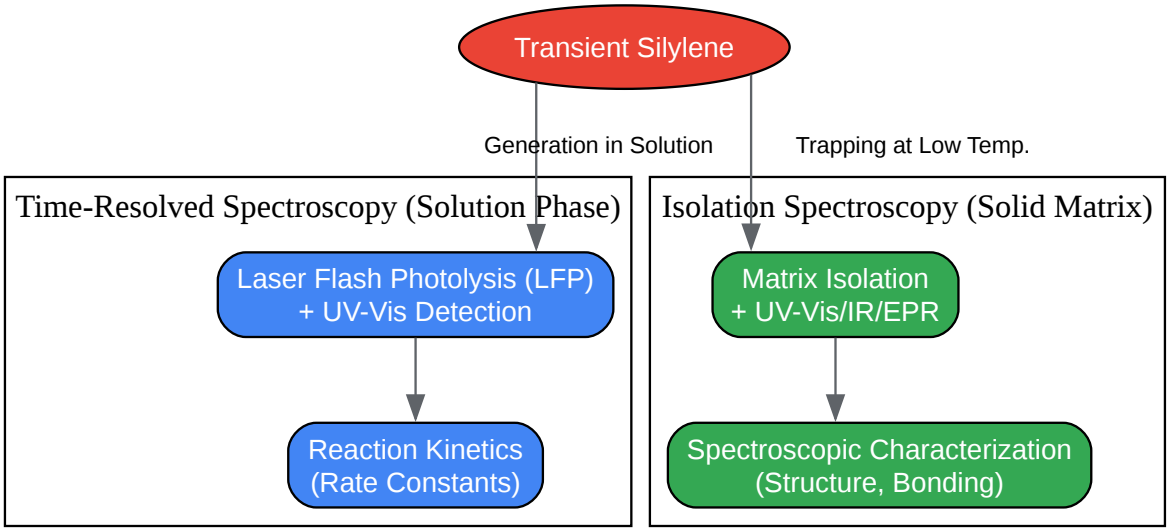

Click to download full resolution via product page

© 2026 BenchChem. All rights reserved.

Need Custom Synthesis?

BenchChem offers custom synthesis for rare earth carbides and specific isotopiclabeling.

Email: info@benchchem.com or Request Quote Online.

References

- 1. pubs.acs.org [pubs.acs.org]
- 2. pubs.acs.org [pubs.acs.org]
- 3. pstorage-acs-6854636.s3.amazonaws.com [pstorage-acs-6854636.s3.amazonaws.com]
- To cite this document: BenchChem. [Detecting Fleeting Silylenes: A Comparative Guide to UV-Vis Spectroscopy and Alternative Techniques]. BenchChem, [2026]. [Online PDF]. Available at: [https://www.benchchem.com/product/b15895236/docs#detecting-fleeting-silylenes-a-comparative-guide-to-uv-vis-spectroscopy-and-alternative-techniques]

Disclaimer & Data Validity:

The information provided in this document is for Research Use Only (RUO) and is strictly not intended for diagnostic or therapeutic procedures. While BenchChem strives to provide accurate protocols, we make no warranties, express or implied, regarding the fitness of this product for every specific experimental setup.

Technical Support: The protocols provided are for reference purposes. Unsure if this reagent suits your experiment?

Need Industrial/Bulk Grade? Request Custom Synthesis Quote

BenchChem

Our mission is to be the trusted global source of essential and advanced chemicals, empowering scientists and researchers to drive progress in science and industry.

Contact

Address: 3281 E Guasti Rd

Ontario, CA 91761, United States

Phone: (601) 213-4426

Email: info@benchchem.com

Contact our Ph.D. Support Team for a compatibility check

© 2026 BenchChem. All rights reserved.