# The Therapeutic Potential of Butyrate Compounds: A Technical Guide

**Author**: BenchChem Technical Support Team. **Date**: April 2026

***Compound of Interest***

| | |
|---|---|
| *Compound Name:* | *Neryl butyrate* |
| *CAS No.:* | *999-40-6* |
| *Cat. No.:* | *B1588603* |

*Get Quote*

For Researchers, Scientists, and Drug Development Professionals

## Introduction

Butyrate, a short-chain fatty acid (SCFA) produced by the microbial fermentation of dietary fibers in the colon, has emerged as a molecule of significant therapeutic interest.[1][2][3] It serves as the primary energy source for colonocytes and plays a crucial role in maintaining gut homeostasis.[4][5] Beyond its physiological role in the gut, butyrate exhibits a wide range of pharmacological effects, including anti-inflammatory, anti-cancer, and metabolic regulatory properties, making it a promising candidate for therapeutic development across a spectrum of diseases.[2][6] This technical guide provides an in-depth overview of the core mechanisms of action of butyrate compounds, summarizes key quantitative data from preclinical and clinical studies, outlines detailed experimental protocols, and visualizes the intricate signaling pathways involved.

## Core Mechanisms of Action

Butyrate's diverse biological activities are primarily attributed to two main mechanisms: its ability to act as a histone deacetylase (HDAC) inhibitor and its function as a signaling molecule

© 2026 BenchChem. All rights reserved.

through G-protein coupled receptors (GPCRs).[1][2][6]

## Histone Deacetylase (HDAC) Inhibition

Butyrate is a potent inhibitor of class I and II histone deacetylases (HDACs).[1][7][8][9] HDACs are enzymes that remove acetyl groups from histones, leading to a more compact chromatin structure and transcriptional repression. By inhibiting HDACs, butyrate promotes histone hyperacetylation, which results in a more open chromatin configuration, making DNA more accessible for transcription factors.[6][9] This epigenetic modification leads to the altered expression of a multitude of genes involved in critical cellular processes such as cell cycle progression, differentiation, and apoptosis.[9][10] For instance, butyrate-induced histone hyperacetylation can lead to the upregulation of cell cycle inhibitors like p21, contributing to its anti-proliferative effects in cancer cells.[9][10] However, it's noteworthy that butyrate can also lead to the deacetylation of histones at certain gene promoters, resulting in gene down-regulation.[11]

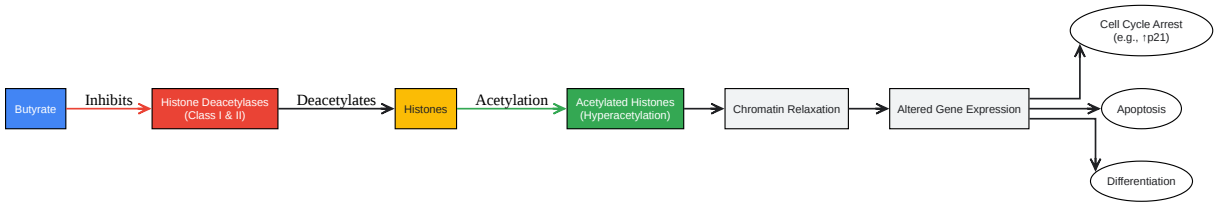


Click to download full resolution via product page

Butyrate's HDAC Inhibition Pathway

## G-Protein Coupled Receptor (GPCR) Activation

Butyrate also functions as a ligand for a family of G-protein coupled receptors, including GPR41 (FFAR3), GPR43 (FFAR2), and GPR109a (HCAR2).[6][12][13] These receptors are expressed on the surface of various cell types, including intestinal epithelial cells, immune cells, and adipocytes.[6][12] Activation of these GPCRs by butyrate initiates downstream signaling

© 2026 BenchChem. All rights reserved.

cascades that influence a range of physiological responses. For example, activation of GPR43 in immune cells can suppress inflammatory responses.[6] In enteroendocrine cells, butyrate-mediated activation of GPR41 and GPR43 stimulates the release of gut hormones like glucagon-like peptide-1 (GLP-1) and peptide YY (PYY), which are involved in regulating appetite and glucose homeostasis.[14] GPR109a activation has been linked to the suppression of inflammation and cancer cell growth.[12][15]

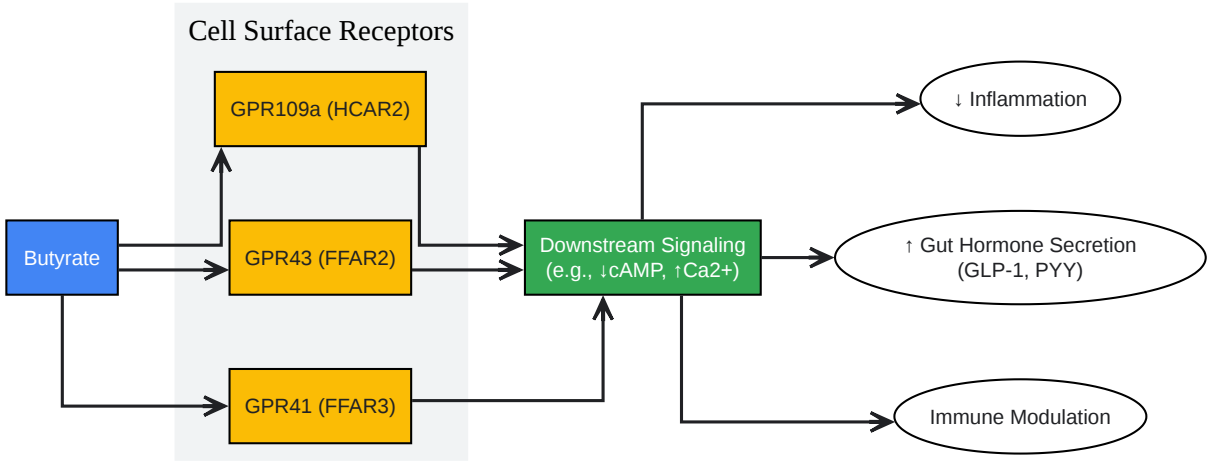


Click to download full resolution via product page

Butyrate's GPCR Signaling Pathways

# Therapeutic Applications and Quantitative Data

The multifaceted mechanisms of butyrate translate into a broad spectrum of potential therapeutic applications.

## Inflammatory Bowel Disease (IBD)

Butyrate is a key regulator of intestinal homeostasis and has shown promise in the management of IBD, which includes Crohn's disease and ulcerative colitis.[3][4][5] It strengthens the intestinal barrier, possesses potent anti-inflammatory properties by inhibiting pro-inflammatory cytokines and pathways like NF-κB, and modulates the gut microbiome.[4][16]

© 2026 BenchChem. All rights reserved.

| Study Type | Butyrate Formulation | Dosage | Key Findings | Reference |
|---|---|---|---|---|
| Clinical Trial (Ulcerative Colitis) | Oral Sodium Butyrate | 1800 mg/day | Increased SCFA-producing bacteria. | [17] |
| Preclinical (Colitis Model) | Butyrate Administration | Not specified | Enhanced Treg cell function, suppressed IL-17. | [18] |
| Clinical Review | Oral supplements, enemas | Varied | Oral supplements effective in reducing inflammation. | [18] |

## Cancer

Butyrate exhibits anti-neoplastic properties, particularly in colorectal cancer.[19][20][21] It can induce apoptosis (programmed cell death), inhibit the proliferation of cancer cells, and promote cell differentiation.[19][20][21] These effects are largely mediated through its HDAC inhibitory activity.[12] Butyrate has also been shown to enhance the efficacy of conventional cancer therapies like chemotherapy and radiation.[20][22]

© 2026 BenchChem. All rights reserved.

| Cell Line | Butyrate Compound | IC50 (Half-maximal inhibitory concentration) | Effect | Reference |
|---|---|---|---|---|
| HCT-116 (Colorectal Cancer) | Sodium Butyrate | 6.21 mM (at 24h) | Inhibition of cell proliferation. | [23] |
| Various Cancer Cell Lines | Butyrate | Dose-dependent | Inhibition of proliferation, induction of apoptosis. | [19] |

## Metabolic Disorders

Emerging evidence suggests a beneficial role for butyrate in metabolic diseases such as obesity and type 2 diabetes.[1][24] It can improve insulin sensitivity, increase energy expenditure, and regulate appetite through the stimulation of gut hormone secretion.[1][6][24]

| Study Population | Intervention | Dosage | Primary Outcome | Reference |
|---|---|---|---|---|
| Children with Obesity | Oral Sodium Butyrate | 20 mg/kg body weight/day | Reduction in BMI SD scores, improved glucose metabolism. | [24] |
| Patients with Hypertension | Oral Sodium Butyrate | 3.9 g/day | Increased blood pressure. | [25] |
| Animal Model (Obesity) | Butyrate Supplementation | Not specified | Reduced body weight and fat content, improved insulin sensitivity. | [10] |

© 2026 BenchChem. All rights reserved.

## Neurological Disorders

Butyrate can cross the blood-brain barrier and has shown neuroprotective effects in various models of neurological and psychological disorders.[26][27][28] Its HDAC inhibitory activity in the brain can modulate gene expression related to neuronal function and survival.[27][28] It is being investigated for its potential in conditions like Parkinson's disease, Alzheimer's disease, and depression.[26][29][30]

| Disorder Model | Butyrate Intervention | Observed Effects | Reference |
|---|---|---|---|
| Parkinson's Disease (mouse model) | Sodium Butyrate | Neuroprotective effects, regulation of gut microbiota. | [31] |
| Various Neurological Disorders (review) | Pharmacological Butyrate | Wide array of beneficial effects on brain health. | [27] |
| General Brain Health (review) | Butyrate | Neuroprotective functions. | [28] |

# Key Signaling Pathways Modulated by Butyrate

Butyrate's therapeutic effects are mediated through its influence on several key intracellular signaling pathways.

## Anti-inflammatory Signaling

A primary mechanism of butyrate's anti-inflammatory action is the inhibition of the NF-κB (nuclear factor-kappa B) signaling pathway.[4][16] NF-κB is a key transcription factor that promotes the expression of pro-inflammatory cytokines. Butyrate can suppress NF-κB activation, thereby reducing the production of inflammatory mediators like TNF-α and IL-6.[19][32] Butyrate also modulates other inflammatory pathways, including the STAT3 (Signal Transducer and Activator of Transcription 3) pathway.[12]

© 2026 BenchChem. All rights reserved.

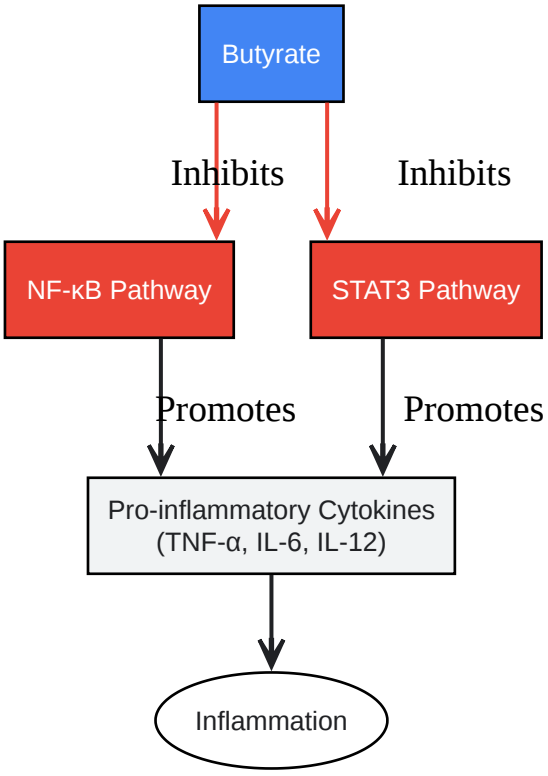


Click to download full resolution via product page

Butyrate's Anti-inflammatory Signaling

# Experimental Protocols

This section outlines general methodologies for key experiments cited in the literature to assess the therapeutic effects of butyrate.

## Cell Viability and Proliferation Assay

Objective: To determine the effect of butyrate on the viability and proliferation of cancer cells.

Methodology:

- Cell Culture: Culture cancer cell lines (e.g., HCT-116, HT-29) in appropriate media and conditions.
- Treatment: Seed cells in 96-well plates and treat with a range of concentrations of sodium butyrate for 24, 48, and 72 hours.

© 2026 BenchChem. All rights reserved.

- MTT Assay: Add MTT (3-(4,5-dimethylthiazol-2-yl)-2,5-diphenyltetrazolium bromide) solution to each well and incubate. The MTT is reduced by metabolically active cells to form a purple formazan product.
- Quantification: Solubilize the formazan crystals and measure the absorbance at a specific wavelength (e.g., 570 nm) using a microplate reader.
- Data Analysis: Calculate cell viability as a percentage of the untreated control and determine the IC50 value.




Click to download full resolution via product page

Workflow for Cell Proliferation Assay

## Histone Deacetylase (HDAC) Activity Assay

Objective: To measure the inhibitory effect of butyrate on HDAC activity.

Methodology:

- Nuclear Extract Preparation: Isolate nuclear extracts from treated or untreated cells.
- HDAC Assay: Use a commercially available colorimetric or fluorometric HDAC activity assay kit.
- Procedure: Incubate the nuclear extracts with an HDAC substrate in the presence or absence of butyrate. The assay measures the amount of acetylated substrate that is deacetylated by the HDACs in the sample.
- Quantification: Measure the colorimetric or fluorescent signal according to the manufacturer's instructions.
- Data Analysis: Compare the HDAC activity in butyrate-treated samples to the control to determine the percentage of inhibition.

© 2026 BenchChem. All rights reserved.

## Western Blot Analysis for Protein Expression

Objective: To assess the effect of butyrate on the expression levels of specific proteins (e.g., p21, acetylated histones).

Methodology:

- Cell Lysis: Lyse butyrate-treated and control cells to extract total protein.
- Protein Quantification: Determine the protein concentration of each lysate using a BCA or Bradford assay.
- SDS-PAGE: Separate the proteins by size using sodium dodecyl sulfate-polyacrylamide gel electrophoresis.
- Protein Transfer: Transfer the separated proteins from the gel to a PVDF or nitrocellulose membrane.
- Immunoblotting: Block the membrane and then incubate with primary antibodies specific to the target proteins (e.g., anti-p21, anti-acetyl-H3).
- Detection: Incubate with a secondary antibody conjugated to an enzyme (e.g., HRP) and detect the signal using a chemiluminescent substrate.
- Analysis: Quantify the band intensities and normalize to a loading control (e.g., β-actin or GAPDH).

# Conclusion and Future Directions

Butyrate compounds hold significant therapeutic promise across a wide range of diseases, driven by their well-defined mechanisms of action as HDAC inhibitors and GPCR agonists. The preclinical and emerging clinical data are encouraging, particularly in the fields of gastroenterology, oncology, and metabolic diseases. However, a notable challenge for the clinical translation of butyrate is its rapid absorption and metabolism in the upper gastrointestinal tract, which limits its delivery to the colon and systemic circulation.[33]

Future research and development efforts should focus on:

© 2026 BenchChem. All rights reserved.

- Advanced Drug Delivery Systems: Developing novel formulations, such as microencapsulation, enteric coatings, and prodrugs, to ensure targeted delivery of butyrate to the colon and enhance its bioavailability.[4]
- Combination Therapies: Investigating the synergistic effects of butyrate with existing therapeutic agents to improve efficacy and overcome drug resistance.[22]
- Personalized Medicine: Identifying biomarkers to predict which patient populations are most likely to respond to butyrate therapy, considering individual variations in gut microbiota composition and metabolic profiles.
- Large-Scale Clinical Trials: Conducting robust, well-designed clinical trials to definitively establish the efficacy and safety of butyrate compounds in various disease indications.[3]

In conclusion, butyrate represents a compelling natural molecule with the potential to be developed into a novel class of therapeutics. A deeper understanding of its complex pharmacology and the development of innovative delivery strategies will be critical to unlocking its full therapeutic potential for the benefit of patients.

***Need Custom Synthesis?***

*BenchChem offers custom synthesis for rare earth carbides and specific isotopiclabeling.*

*Email: info@benchchem.com or Request Quote Online.*

## References

- 1. Butyrate to combat obesity and obesity-associated metabolic disorders: Current status and future implications for therapeutic use - PMC [pmc.ncbi.nlm.nih.gov]
- 2. benthamdirect.com [benthamdirect.com]
- 3. Gut Microbial Metabolite Butyrate and Its Therapeutic Role in Inflammatory Bowel Disease: A Literature Review - PubMed [pubmed.ncbi.nlm.nih.gov]
- 4. nbinno.com [nbinno.com]
- 5. Gut Microbial Metabolite Butyrate and Its Therapeutic Role in Inflammatory Bowel Disease: A Literature Review - PMC [pmc.ncbi.nlm.nih.gov]

© 2026 BenchChem. All rights reserved.

- 6. Frontiers | Role of Butyrate, a Gut Microbiota Derived Metabolite, in Cardiovascular Diseases: A comprehensive narrative review [frontiersin.org]
- 7. pnas.org [pnas.org]
- 8. axonmedchem.com [axonmedchem.com]
- 9. researchgate.net [researchgate.net]
- 10. Potential beneficial effects of butyrate in intestinal and extraintestinal diseases - PMC [pmc.ncbi.nlm.nih.gov]
- 11. Butyrate mediates decrease of histone acetylation centered on transcription start sites and down-regulation of associated genes - PMC [pmc.ncbi.nlm.nih.gov]
- 12. Effects of Intestinal Microbial–Elaborated Butyrate on Oncogenic Signaling Pathways - PMC [pmc.ncbi.nlm.nih.gov]
- 13. researchgate.net [researchgate.net]
- 14. nutrined.com [nutrined.com]
- 15. Frontiers | Butyrate Suppresses Glucose Metabolism of Colorectal Cancer Cells via GPR109a-AKT Signaling Pathway and Enhances Chemotherapy [frontiersin.org]
- 16. Butyrate: A Double-Edged Sword for Health? - PMC [pmc.ncbi.nlm.nih.gov]
- 17. Butyrate Therapy for Treatment-Resistant Ulcerative Colitis: A Case Study | Nutritional Medicine Institute [nmi.health]
- 18. mdpi.com [mdpi.com]
- 19. Butyrate as a promising therapeutic target in cancer: From pathogenesis to clinic (Review) - PMC [pmc.ncbi.nlm.nih.gov]
- 20. hope4cancer.com [hope4cancer.com]
- 21. journals.physiology.org [journals.physiology.org]
- 22. Potential of butyrate in cancer care: anti-inflammatory, inhibiting cancer cell growth and improving intestinal health – BMS Clinic [bmsclinic.com.hk]
- 23. mdpi.com [mdpi.com]
- 24. blog.bioticsresearch.com [blog.bioticsresearch.com]
- 25. ahajournals.org [ahajournals.org]
- 26. Butyrate as a potential therapeutic agent for neurodegenerative disorders - PubMed [pubmed.ncbi.nlm.nih.gov]
- 27. Butyrate, Neuroepigenetics and the Gut Microbiome: Can a High Fiber Diet Improve Brain Health? - PMC [pmc.ncbi.nlm.nih.gov]


© 2026 BenchChem. All rights reserved.

- 28. tandfonline.com [tandfonline.com]
- 29. mdpi.com [mdpi.com]
- 30. Frontiers | Buty and the beast: the complex role of butyrate in Parkinson's disease [frontiersin.org]
- 31. Neuroprotective Effects of Sodium Butyrate by Restoring Gut Microbiota and Inhibiting TLR4 Signaling in Mice with MPTP-Induced Parkinson's Disease - PubMed [pubmed.ncbi.nlm.nih.gov]
- 32. researchgate.net [researchgate.net]
- 33. UQ eSpace [espace.library.uq.edu.au]


- To cite this document: BenchChem. [The Therapeutic Potential of Butyrate Compounds: A Technical Guide]. BenchChem, [2026]. [Online PDF]. Available at: [https://www.benchchem.com/product/b1588603/docs#the-therapeutic-potential-of-butyrate-compounds-a-technical-guide]

---

**Disclaimer & Data Validity:**

The information provided in this document is for Research Use Only (RUO) and is strictly not intended for diagnostic or therapeutic procedures. While BenchChem strives to provide accurate protocols, we make no warranties, express or implied, regarding the fitness of this product for every specific experimental setup.

**Technical Support:**The protocols provided are for reference purposes. Unsure if this reagent suits your experiment?

**Need Industrial/Bulk Grade?** Request Custom Synthesis Quote

# BenchChem

Our mission is to be the trusted global source of essential and advanced chemicals, empowering scientists and researchers to drive progress in science and industry.

Contact

Address: 3281 E Guasti Rd

Ontario, CA 91761, United States

Phone: (601) 213-4426

Email: info@benchchem.com

© 2026 BenchChem. All rights reserved.

Contact our Ph.D. Support Team for a compatibility check

© 2026 BenchChem. All rights reserved.