Advanced Protocol: 1-n-Octylpyrrole Based Conductive Polymer Films

Author: BenchChem Technical Support Team. **Date**: May 2026

Compound of Interest

Compound Name:	*1-n-Octylpyrrole*
CAS No.:	*50966-65-9*
Cat. No.:	*B1588951*

Get Quote

Executive Summary

Polypyrrole (PPy) is a gold standard in bioelectronics due to its high conductivity and biocompatibility. However, its rigid backbone renders it insoluble and difficult to process. Poly(**1-n-octylpyrrole**) (POPy) bridges this gap. The addition of an eight-carbon alkyl chain at the nitrogen position (

-substitution) imparts solubility in common organic solvents (e.g., chloroform, tetrahydrofuran), enabling spin-coating and casting techniques unavailable to unsubstituted PPy.

While

-substitution typically reduces conductivity by disrupting planarity (

to

S/cm vs. 10-100 S/cm for PPy), the gain in processability and hydrophobicity makes POPy an ideal candidate for hydrophobic drug delivery systems and flexible biosensing interfaces.

© 2026 BenchChem. All rights reserved.

This guide provides a validated protocol for the electrochemical and chemical synthesis of POPy films, emphasizing the critical parameters required to maintain film integrity and electroactivity.

Material Preparation & Safety

Causality in Chemistry: The purity of the monomer and the water content of the solvent are the primary determinants of film quality. The octyl chain makes the monomer hydrophobic; therefore, aqueous electropolymerization (standard for PPy) will result in poor adhesion and heterogeneous films. Anhydrous organic media is mandatory.

Required Reagents

Reagent	Grade/Purity	Function	Critical Note
1-n-Octylpyrrole	>98%	Monomer	Store at 4°C under . Distill if yellow/brown.
Acetonitrile (ACN)	Anhydrous (<10 ppm)	Solvent	Water scavenges radical cations, terminating chain growth.
Lithium Perchlorate ( )	Battery Grade (Dry)	Electrolyte	Provides counter-ions ( ) for doping.
Ferric Chloride ( )	Anhydrous	Chemical Oxidant	For bulk synthesis protocol.
Chloroform ( )	HPLC Grade	Casting Solvent	Used for spin-coating chemically synthesized POPy.

Protocol A: Electrochemical Polymerization (High Precision)

© 2026 BenchChem. All rights reserved.

Best for: Sensor coatings, micro-electrodes, and thin-film characterization.

Experimental Setup

Use a standard three-electrode configuration. Because the solvent is organic (ACN), a non-aqueous reference electrode is required to prevent junction potential drift.

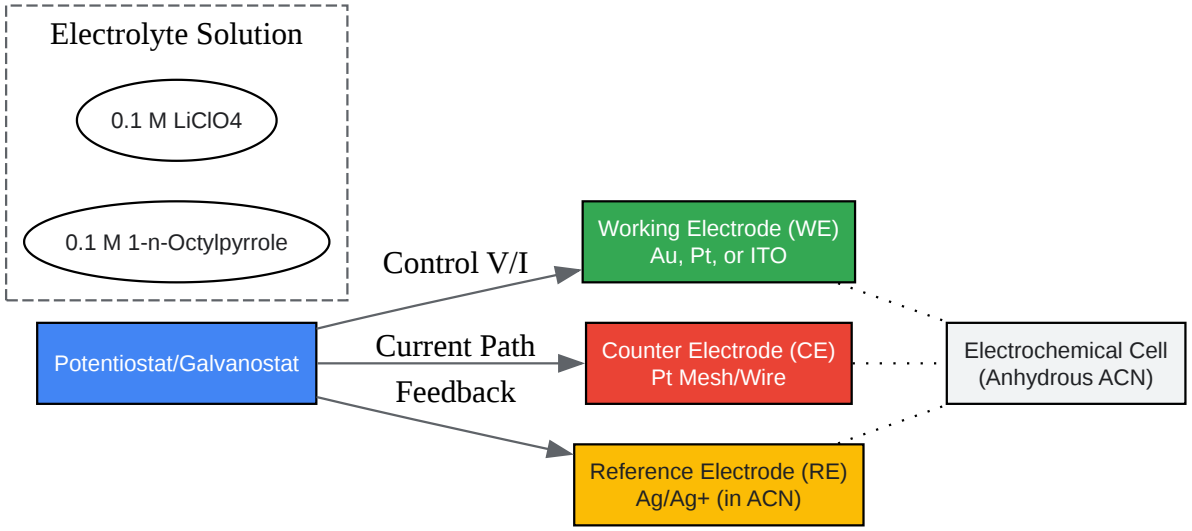

Click to download full resolution via product page

Figure 1: Three-electrode setup for non-aqueous electropolymerization. Note the use of Ag/Ag+ reference to match the solvent system.

Step-by-Step Procedure

- Electrode Polishing: Polish the Working Electrode (WE) with 0.05

  alumina slurry. Sonicate in ACN for 5 mins. Reason: Surface oxides increase resistance, leading to delamination.

- Solution Preparation: Dissolve 0.1 M **1-n-octylpyrrole** and 0.1 M

  in anhydrous Acetonitrile. Purge with

  for 15 mins.

© 2026 BenchChem. All rights reserved.

- Cyclic Voltammetry (CV) Sweep (Diagnostic):
  - Scan from -0.5 V to +1.5 V vs Ag/Ag+.
  - Observation: Look for an oxidation peak onset around +0.8 V to +1.0 V. The crossover loop on the return scan indicates nucleation and growth of the conductive polymer.
- Potentiostatic Deposition (Film Growth):
  - Apply a constant potential of +1.1 V (approx. 100-200 mV above oxidation onset).
  - Duration: 60–300 seconds depending on desired thickness.
  - Self-Validation: The current (

) should initially spike (double-layer charging), drop (nucleation), and then rise and plateau (film growth). If

    drops continuously, the electrode is passivated (insulating film formed).
- Washing: Rinse the film gently with monomer-free ACN to remove oligomers.

Protocol B: Chemical Synthesis & Solution Casting (Scalable)

Best for: Large area coatings, flexible substrates, and drug delivery matrices.

Unlike PPy, chemically synthesized POPy is soluble. This allows us to synthesize the bulk polymer, purify it, and then cast it as a high-quality film.

Synthesis Workflow

- Mixing: Dissolve **1-n-octylpyrrole** (10 mmol) in dry Chloroform (

).
- Oxidation: Prepare anhydrous

© 2026 BenchChem. All rights reserved.

(30 mmol) in

.

- Ratio: Maintain a 3:1 oxidant-to-monomer ratio to ensure full polymerization without over-oxidation.

- Reaction: Add oxidant solution dropwise to monomer solution at 0°C under

  atmosphere. Stir for 24 hours.

  - Why 0°C? Lower temperatures reduce side-reactions and increase conjugation length (higher conductivity).

- Precipitation: Pour the black mixture into excess Methanol. The polymer will precipitate (POPy is insoluble in methanol).

- Filtration & Drying: Filter the black precipitate and dry under vacuum.

Film Casting

- Dissolution: Dissolve the dried POPy powder in

  or THF (20 mg/mL).

- Spin Coating:

  - Substrate: Glass or PET.

  - Speed: 1000 RPM for 30s.

  - Result: A uniform, hydrophobic black film.

Characterization & Expected Data

Quantitative Properties

© 2026 BenchChem. All rights reserved.

Parameter	Typical Value (POPy)	Comparison to PPy	Method
Conductivity	- S/cm	Lower (S/cm)	4-Point Probe
Solubility	Soluble in , THF, DCM	Insoluble	Visual/Gravimetric
Contact Angle	90° - 105° (Hydrophobic)	<60° (Hydrophilic)	Goniometer
Oxidation Potential	+0.9 V vs Ag/Ag+	+0.7 V vs Ag/Ag+	Cyclic Voltammetry

Application: Drug Delivery Mechanism

The hydrophobic nature of POPy makes it an excellent host for hydrophobic drugs (e.g., Dexamethasone). The release is triggered by electro-stimulation, which changes the polymer's redox state, altering its volume and electrostatic interactions.

© 2026 BenchChem. All rights reserved.

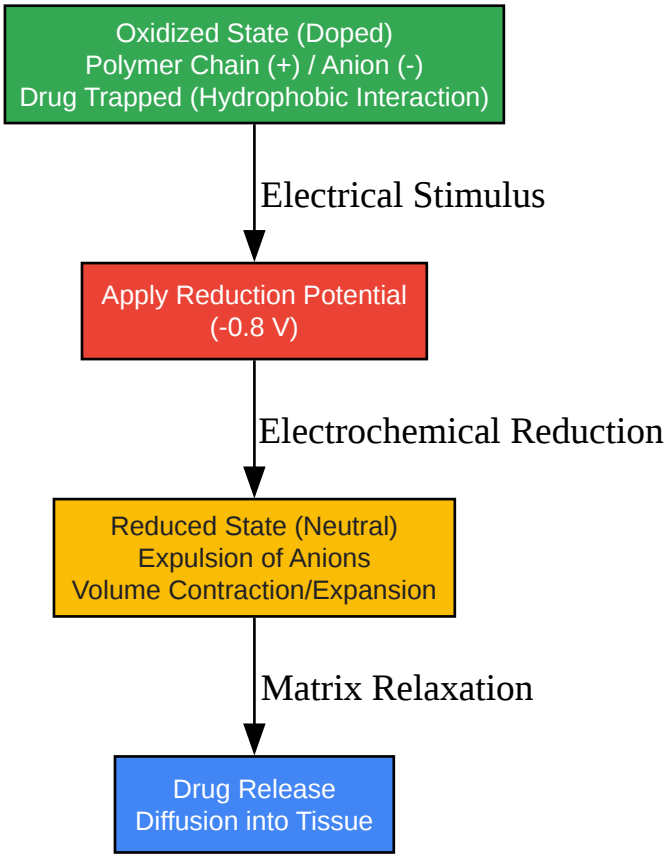

Click to download full resolution via product page

Figure 2: Mechanism of electro-stimulated drug release from **1-n-octylpyrrole** films. The redox switch alters the polymer matrix, forcing the release of the payload.

Troubleshooting & Optimization

- Problem: Film is powdery or non-adherent.
  - Cause: Water contamination in ACN or high current density.
  - Fix: Dry solvent over molecular sieves; reduce polymerization potential to +1.0 V.
- Problem: Low Conductivity (<

  S/cm).
  - Cause: Over-oxidation or short conjugation length.

© 2026 BenchChem. All rights reserved.

- Fix: Ensure temperature is low (0°C) during synthesis. Avoid potentials >+1.3 V during electropolymerization.

- Problem: Monomer does not dissolve.
  - Cause: Using aqueous buffer.
  - Fix: **1-n-octylpyrrole** is hydrophobic. Switch to ACN/DCM or use a surfactant (SDS) if aqueous media is strictly required (though this yields inferior films).

References

- Electropolymerization Kinetics: Scholz, F. et al. "Electrochemical polymerization of N-substituted pyrroles." Journal of Electroanalytical Chemistry, 2021. 1
- Conductivity & Substitution Effects: Mural, A. "Electrochemical formation of N–substituted polypyrrole nanowires... and conductivity analysis." Maynooth University Research Archive, 2021. 2
- Chemical Synthesis of Alkyl-Pyrroles: BenchChem Protocols. "Synthesis of Pyrrole-Containing Phenol Monomer and Derivatives." BenchChem Application Notes, 2025. 3
- Drug Delivery Applications: NIH PubMed Central. "Biosensor-Integrated Drug Delivery Systems as New Materials for Biomedical Applications." PMC, 2024. 4[5]
- Solvent-Free/Chemical Synthesis: American Chemical Society. "Synthesis of Polypyrrole and Its Derivatives... via Chemical Oxidative Polymerization."[6][7] ACS Omega, 2022. 8

Need Custom Synthesis?

BenchChem offers custom synthesis for rare earth carbides and specific isotopiclabeling.

Email: info@benchchem.com or Request Quote Online.

Sources

- 1. researchgate.net [researchgate.net]

- 2. mural.maynoothuniversity.ie [mural.maynoothuniversity.ie]
- 3. pdf.benchchem.com [pdf.benchchem.com]
- 4. Biosensor-Integrated Drug Delivery Systems as New Materials for Biomedical Applications - PMC [pmc.ncbi.nlm.nih.gov]
- 5. mdpi.com [mdpi.com]
- 6. Synthesis and Characterization of Polypyrrole (PPy) Thin Films [scirp.org]
- 7. researchgate.net [researchgate.net]
- 8. Synthesis of Polypyrrole and Its Derivatives as a Liquid Marble Stabilizer via a Solvent-Free Chemical Oxidative Polymerization Protocol - PMC [pmc.ncbi.nlm.nih.gov]

- To cite this document: BenchChem. [Advanced Protocol: 1-n-Octylpyrrole Based Conductive Polymer Films]. BenchChem, [2026]. [Online PDF]. Available at: [https://www.benchchem.com/product/b1588951/docs#advanced-protocol-1-n-octylpyrrole-based-conductive-polymer-films]

Disclaimer & Data Validity:

The information provided in this document is for Research Use Only (RUO) and is strictly not intended for diagnostic or therapeutic procedures. While BenchChem strives to provide accurate protocols, we make no warranties, express or implied, regarding the fitness of this product for every specific experimental setup.

Technical Support: The protocols provided are for reference purposes. Unsure if this reagent suits your experiment?

Need Industrial/Bulk Grade? Request Custom Synthesis Quote

BenchChem

Our mission is to be the trusted global source of essential and advanced chemicals, empowering scientists and researchers to drive progress in science and industry.

Contact

Address: 3281 E Guasti Rd

Ontario, CA 91761, United States

Phone: (601) 213-4426

Email: info@benchchem.com

© 2026 BenchChem. All rights reserved.

Contact our Ph.D. Support Team for a compatibility check

© 2026 BenchChem. All rights reserved.