spectral data for 2,3,5-Trifluorophenol (NMR, IR, MS)

Author: BenchChem Technical Support Team. **Date**: May 2026

Compound of Interest

Compound Name:	*2,3,5-Trifluorophenol*
CAS No.:	*2268-15-7*
Cat. No.:	*B1587228*

Get Quote

An In-Depth Technical Guide to the Spectroscopic Characterization of **2,3,5-Trifluorophenol**

Introduction

2,3,5-Trifluorophenol (CAS No: 2268-15-7; Molecular Formula: $C_6H_3F_3O$; Molecular Weight: 148.08 g/mol) is a fluorinated aromatic compound of significant interest in synthetic chemistry and drug development.[1] Its utility as a building block stems from the unique electronic properties conferred by the trifluoro-substitution pattern on the phenolic ring. Accurate and comprehensive characterization of such molecules is a cornerstone of scientific integrity, ensuring identity, purity, and structural fidelity.

This technical guide provides an in-depth analysis of the core spectroscopic data for **2,3,5-Trifluorophenol**, covering Nuclear Magnetic Resonance (NMR) spectroscopy, Infrared (IR) spectroscopy, and Mass Spectrometry (MS). The discussion is framed from the perspective of a senior application scientist, focusing not just on the data itself, but on the causal logic behind the spectral features and the experimental protocols designed for their reliable acquisition.

© 2026 BenchChem. All rights reserved.

Nuclear Magnetic Resonance (NMR) Spectroscopy: Probing the Core Structure

NMR spectroscopy is the most powerful technique for elucidating the precise atomic connectivity of an organic molecule. For fluorinated compounds like **2,3,5-Trifluorophenol**, a multi-nuclear approach (^{1}H, ^{13}C, and ^{19}F) is indispensable.

Theoretical Insight

The presence of three magnetically active nuclei (^{1}H, ^{13}C, and ^{19}F, all with spin I = ½) provides a rich tapestry of structural information. Key parameters are the chemical shift (δ), which indicates the electronic environment of a nucleus, and the spin-spin coupling constant (J), which reveals through-bond proximity to other active nuclei. ^{19}F NMR is particularly valuable due to the 100% natural abundance and high gyromagnetic ratio of the ^{19}F nucleus, resulting in high sensitivity and a wide chemical shift range that minimizes signal overlap.

^{1}H NMR Spectral Analysis

The ^{1}H NMR spectrum of **2,3,5-Trifluorophenol** is expected to show three distinct signals: one for the hydroxyl proton and two for the aromatic protons.

- Hydroxyl Proton (-OH): This proton will appear as a broad singlet, the chemical shift of which is highly dependent on solvent, concentration, and temperature due to hydrogen bonding.
- Aromatic Protons (H-4 and H-6): The two aromatic protons are in different chemical environments.
    - H-4: This proton is flanked by two fluorine atoms (F-3 and F-5). It will be split by the adjacent H-6 proton (meta-coupling, ^{3}JHH) and by the two fluorine atoms (^{3}JHF and ^{3}JHF).
    - H-6: This proton is adjacent to the F-5 fluorine. It will be split by the H-4 proton (meta-coupling, ^{3}JHH) and the F-5 fluorine (ortho-coupling, ^{3}JHF).

The resulting multiplets for H-4 and H-6 will be complex due to these overlapping couplings.

© 2026 BenchChem. All rights reserved.

Proton Assignment	Expected Chemical Shift (δ, ppm)	Expected Multiplicity	Coupling Interactions
-OH	Variable (e.g., 5.0 - 7.0)	Broad Singlet (br s)	-
H-4	~6.6 - 7.0	Multiplet (m)	^{3}JH4-H6, ^{3}JH4-F3, ^{3}JH4-F5
H-6	~6.8 - 7.2	Multiplet (m)	^{3}JH6-H4, ^{3}JH6-F5

^{13}C NMR Spectral Analysis

The proton-decoupled ^{13}C NMR spectrum will display six distinct signals for the six aromatic carbons. The chemical shifts are heavily influenced by the electronegative fluorine and oxygen substituents. A key feature is the presence of carbon-fluorine coupling (JCF), which provides definitive evidence for the substitution pattern. The magnitude of JCF is typically largest for the directly attached carbon (^{1}JCF) and decreases with the number of bonds separating the nuclei. [2]

Carbon Assignment	Expected Chemical Shift (δ, ppm)	Expected Multiplicity & Coupling (^{1}JCF)
C-1 (-OH)	~150 - 158	Doublet of Doublets (dd) due to C-F coupling
C-2 (-F)	~145 - 155	Doublet (d), Large ^{1}JCF
C-3 (-F)	~140 - 150	Doublet (d), Large ^{1}JCF
C-4	~105 - 115	Doublet of Doublets (dd) due to C-F coupling
C-5 (-F)	~140 - 150	Doublet (d), Large ^{1}JCF
C-6	~100 - 110	Doublet (d) due to C-F coupling

^{19}F NMR Spectral Analysis

© 2026 BenchChem. All rights reserved.

The ^{19}F NMR spectrum provides the most direct view of the fluorine substitution. Three distinct signals are expected, corresponding to F-2, F-3, and F-5. These signals will be split by each other (F-F coupling) and by nearby protons (H-F coupling).[3]

Fluorine Assignment	Expected Chemical Shift (δ, ppm)	Expected Multiplicity	Coupling Interactions
F-2	-105 to -115	Multiplet (m)	$^{3}JF2-F3$, $^{4}JF2-H6$
F-3	-125 to -135	Multiplet (m)	$^{3}JF3-F2$, $^{3}JF3-H4$
F-5	-130 to -140	Multiplet (m)	$^{4}JF5-F3$, $^{3}JF5-H4$, $^{3}JF5-H6$

Protocol: NMR Spectrum Acquisition

A self-validating protocol for NMR analysis ensures reproducibility and accuracy.

- Sample Preparation: Dissolve ~10-20 mg of **2,3,5-Trifluorophenol** in ~0.6 mL of a deuterated solvent (e.g., $CDCl_3$ or DMSO-d_6). The choice of solvent is critical; DMSO-d_6 can help in observing the hydroxyl proton, which may exchange too rapidly in other solvents.
- Instrumentation: Use a high-field NMR spectrometer (e.g., 400 MHz or higher) equipped with a multinuclear probe.
- ^{1}H NMR Acquisition:
  - Acquire a standard one-pulse ^{1}H spectrum.
  - Optimize spectral width to cover the aromatic and hydroxyl regions.
  - Ensure a sufficient relaxation delay (e.g., 5 seconds) for accurate integration.
- ^{13}C NMR Acquisition:
  - Acquire a proton-decoupled ^{13}C spectrum using a standard pulse program (e.g., zgpg30).
  - A larger number of scans will be required due to the low natural abundance of ^{13}C.

© 2026 BenchChem. All rights reserved.

- ^{19}F NMR Acquisition:
  - Acquire a proton-decoupled ^{19}F spectrum.
  - Set the spectral center and width appropriate for fluorophenols.
  - Use a common fluorine reference standard like $CFCl_3$ (δ = 0 ppm) for accurate chemical shift calibration.[4]
- Data Processing: Apply Fourier transformation, phase correction, and baseline correction to the acquired Free Induction Decays (FIDs). Calibrate the chemical shift scales using the residual solvent peak (for ^{1}H and ^{13}C) or an external standard (for ^{19}F).

Visualization: NMR Coupling Pathway

© 2026 BenchChem. All rights reserved.

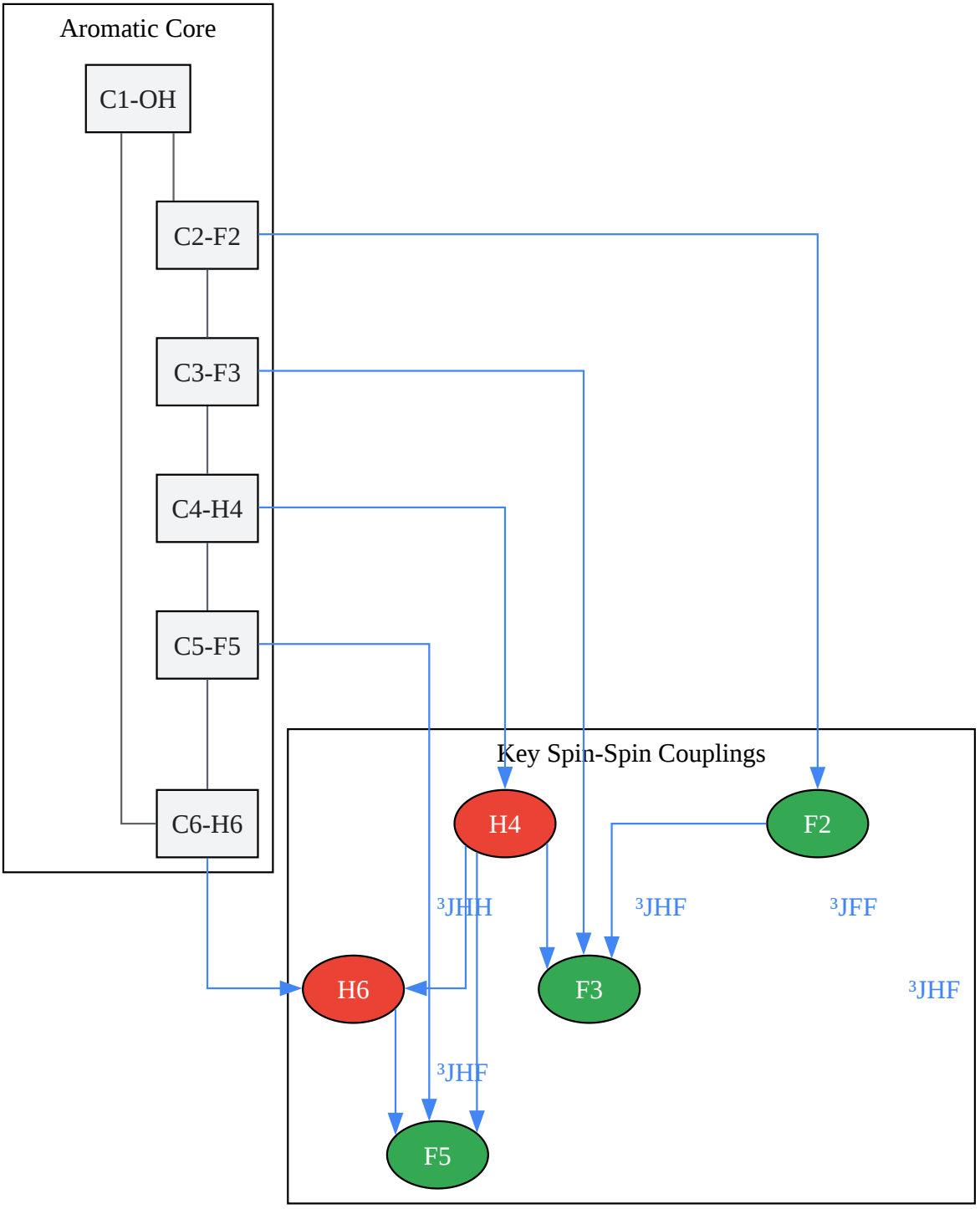

Click to download full resolution via product page

Caption: Key NMR spin-spin coupling interactions in **2,3,5-Trifluorophenol**.

© 2026 BenchChem. All rights reserved.

Infrared (IR) Spectroscopy: Identifying Functional Groups

IR spectroscopy is a rapid and reliable method for identifying the functional groups present in a molecule by measuring the absorption of infrared radiation, which excites molecular vibrations.

Theoretical Insight

Specific bonds and functional groups vibrate at characteristic frequencies. For **2,3,5-Trifluorophenol**, the key absorptions will be the O-H stretch of the phenol, C-O stretch, C=C stretches within the aromatic ring, and the strong C-F bond stretches.

IR Spectral Analysis

The analysis of the IR spectrum allows for the confirmation of key functional moieties.

Wavenumber (cm^{-1})	Vibration Type	Intensity	Significance
3200 - 3600	O-H stretch (H-bonded)	Strong, Broad	Confirms the presence of the phenolic hydroxyl group.[5]
3000 - 3100	Aromatic C-H stretch	Medium	Indicates the aromatic ring structure.
1500 - 1600	Aromatic C=C stretch	Medium-Strong	Characteristic of the phenyl ring backbone.
1200 - 1300	C-O stretch	Strong	Confirms the phenol C-O bond.
1100 - 1250	C-F stretch	Strong	Definitive evidence of carbon-fluorine bonds.[6]

Protocol: FT-IR Spectrum Acquisition (ATR Method)

© 2026 BenchChem. All rights reserved.

Attenuated Total Reflectance (ATR) is a modern, preferred method that requires minimal sample preparation.

- Instrument Preparation: Ensure the ATR crystal (typically diamond) is clean by wiping it with a suitable solvent (e.g., isopropanol) and running a background scan.
- Sample Application: Place a small amount of the solid **2,3,5-Trifluorophenol** sample directly onto the ATR crystal.
- Pressure Application: Use the instrument's pressure arm to press the sample firmly against the crystal, ensuring good contact.
- Data Acquisition: Collect the spectrum, typically by co-adding 16 or 32 scans at a resolution of 4 cm^{-1} over the mid-IR range (4000-400 cm^{-1}).
- Data Processing: The resulting spectrum is automatically ratioed against the background scan to produce the final absorbance or transmittance spectrum.

Visualization: IR Analysis Workflow



Click to download full resolution via product page

Caption: Standard workflow for ATR-FTIR spectroscopic analysis.

Mass Spectrometry (MS): Determining Molecular Weight and Fragmentation

Mass spectrometry provides two crucial pieces of information: the molecular weight of the compound and structural details derived from its fragmentation pattern upon ionization.

Theoretical Insight

In Electron Ionization (EI) MS, the sample is bombarded with high-energy electrons (typically 70 eV). This process ejects an electron from the molecule, forming a radical cation known as

© 2026 BenchChem. All rights reserved.

the molecular ion ($M^{+}\bullet$).[7] The $M^{+}\bullet$ is often unstable and fragments into smaller, more stable charged ions and neutral radicals. The mass analyzer separates these ions based on their mass-to-charge ratio (m/z), and the detector records their relative abundance.

Mass Spectrum Analysis

The EI mass spectrum of **2,3,5-Trifluorophenol** will provide a unique fingerprint.

- Molecular Ion ($M^{+}\bullet$): The peak corresponding to the intact radical cation will appear at an m/z equal to the molecular weight of the compound (148). Its presence confirms the molecular formula.
- Fragmentation Pathways: The fragmentation is driven by the formation of stable ions and neutral losses. Key expected fragmentation pathways for a fluorinated phenol include:
  - Loss of CO: Phenols commonly undergo rearrangement and loss of a neutral carbon monoxide molecule, which would lead to a fragment ion at m/z 120.
  - Loss of HF: The presence of fluorine allows for the elimination of hydrogen fluoride, resulting in a fragment at m/z 128.
  - Loss of a Formyl Radical (•CHO): Cleavage of the ring can lead to the loss of a •CHO radical, yielding a fragment at m/z 119.

m/z (Mass-to-Charge)	Proposed Fragment Ion	Proposed Neutral Loss	Significance
148	$[C_6H_3F_3O]^{+}\bullet$	-	Molecular Ion ($M^{+}\bullet$)
128	$[C_6H_2F_2O]^{+}\bullet$	HF	Loss of Hydrogen Fluoride
120	$[C_5H_3F_3]^{+}\bullet$	CO	Loss of Carbon Monoxide
119	$[C_5H_2F_3]^{+}$	•CHO	Loss of Formyl Radical

© 2026 BenchChem. All rights reserved.

Protocol: GC-MS Analysis

Gas Chromatography-Mass Spectrometry (GC-MS) is the standard technique for volatile compounds like **2,3,5-Trifluorophenol**.

- Sample Preparation: Prepare a dilute solution of the sample (~1 mg/mL) in a volatile solvent like dichloromethane or ethyl acetate.
- GC Separation:
  - Injection: Inject 1 µL of the sample solution into the GC inlet, typically held at 250°C.
  - Column: Use a standard non-polar capillary column (e.g., 30m x 0.25mm, DB-5 or equivalent).
  - Oven Program: A temperature gradient is employed for optimal separation. For example: hold at 50°C for 2 min, then ramp at 10°C/min to 280°C and hold for 5 min.
- MS Detection:
  - Ionization: The column effluent enters the ion source, where EI at 70 eV is performed.
  - Mass Analysis: The ions are separated by a quadrupole or time-of-flight (TOF) analyzer.
  - Detection: A scan range of m/z 40-300 is typically sufficient to capture the molecular ion and key fragments.
- Data Analysis: The resulting total ion chromatogram (TIC) shows the retention time of the compound, and the mass spectrum for that peak can be extracted and analyzed.

Visualization: Proposed MS Fragmentation Pathway

© 2026 BenchChem. All rights reserved.

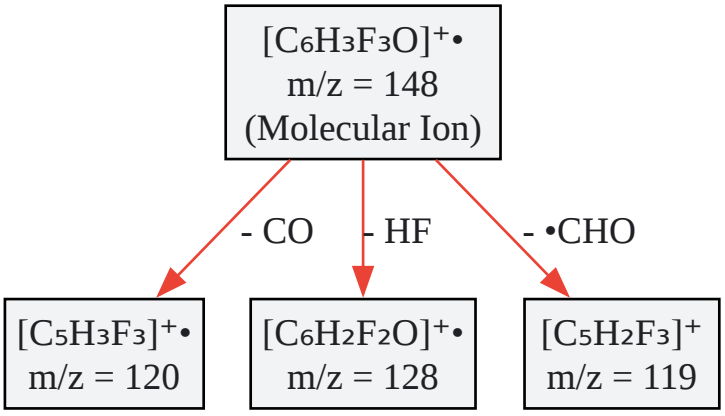

Click to download full resolution via product page

Caption: Primary proposed EI-MS fragmentation pathways for **2,3,5-Trifluorophenol**.

Conclusion

The comprehensive spectroscopic analysis of **2,3,5-Trifluorophenol** through NMR, IR, and MS provides an unambiguous structural confirmation. ^{1}H, ^{13}C, and ^{19}F NMR define the precise atomic arrangement and connectivity. IR spectroscopy confirms the presence of key functional groups (hydroxyl, aromatic ring, C-F bonds). Finally, mass spectrometry verifies the molecular weight and offers corroborating structural evidence through predictable fragmentation patterns. The application of these orthogonal analytical techniques, underpinned by robust experimental protocols, is essential for ensuring the quality and integrity of chemical entities used in research and development.

References

- National Center for Biotechnology Information. (n.d.). 19F Nuclear Magnetic Resonance as a Tool To Investigate Microbial Degradation of Fluorophenols to Fluorocatechols and Fluoromuconates. PubMed Central. Retrieved from [Link]
- National Institute of Standards and Technology. (n.d.). 2,3,5,6-Tetrafluorophenol. NIST Chemistry WebBook. Retrieved from [Link]
- National Center for Biotechnology Information. (n.d.). 2,4,6-Trifluorophenol. PubChem. Retrieved from [Link]

© 2026 BenchChem. All rights reserved.

- National Institute of Standards and Technology. (n.d.). 2,3,5,6-Tetrafluorophenol. NIST Chemistry WebBook. Retrieved from [Link]
- National Center for Biotechnology Information. (n.d.). 2,4,5-Trifluorophenol. PubChem. Retrieved from [Link]
- Wikipedia. (n.d.). Fluorine-19 nuclear magnetic resonance spectroscopy. Wikipedia. Retrieved from [Link]
- Bioregistry. (n.d.). Spectral Database for Organic Compounds. Bioregistry. Retrieved from [Link]
- National Center for Biotechnology Information. (n.d.). 2,3,6-Trifluorophenol. PubChem. Retrieved from [Link]
- National Center for Biotechnology Information. (n.d.). 2,3,5,6-Tetrafluorophenol. PubChem. Retrieved from [Link]
- National Institute of Standards and Technology. (n.d.). 2,4,6-Trifluorophenol. NIST Chemistry WebBook. Retrieved from [Link]
- University of Ottawa. (n.d.). 19Fluorine NMR. NMR Facility. Retrieved from [Link]
- UW-Madison Libraries. (n.d.). Spectral Database for Organic Compounds, SDBS. University of Wisconsin-Madison. Retrieved from [Link]
- Thieme. (n.d.). 13C NMR Spectroscopy. Thieme Connect. Retrieved from [Link]
- Royal Society of Chemistry. (2013). Catalytic Hydrotrifluoromethylation of Styrenes and Unactivated Aliphatic Alkenes via an Organic Photoredox System - Supporting Information. Chemical Science. Retrieved from [Link]
- University of Arizona. (n.d.). Fluorine NMR. University of Arizona. Retrieved from [Link]
- National Institute of Standards and Technology. (n.d.). 2,3,4-Trifluorophenol, methyl ether. NIST Chemistry WebBook. Retrieved from [Link]
- SpectraBase. (n.d.). 2,3,5,6-Tetrafluorophenol. SpectraBase. Retrieved from [Link]

© 2026 BenchChem. All rights reserved.

- SpectraBase. (n.d.). 2,3,4-Trifluorophenol. SpectraBase. Retrieved from [Link]
- ResearchGate. (n.d.). Figure 1. a) 1 H-NMR, b) 13 C-NMR, and c) 13 C-DEPT-135-NMR spectra of... ResearchGate. Retrieved from [Link]
- University of Tübingen. (n.d.). Interpretation of mass spectra. University of Tübingen. Retrieved from [Link]
- National Center for Biotechnology Information. (n.d.). Infrared Spectra and Phototransformations of meta-Fluorophenol Isolated in Argon and Nitrogen Matrices. PubMed Central. Retrieved from [Link]
- Scientific Research Publishing. (n.d.). Spectral Database for Organic Compounds, SDBS. SCIRP. Retrieved from [Link]
- National Institute of Standards and Technology. (n.d.). Phenol, 2,3,5-trimethyl-. NIST Chemistry WebBook. Retrieved from [Link]
- National Institute of Advanced Industrial Science and Technology (AIST), Japan. (n.d.). Spectral Database for Organic Compounds, SDBS. AIST. Retrieved from [Link]
- Stenutz, R. (n.d.). **2,3,5-trifluorophenol**. Stenutz. Retrieved from [Link]
- Fluorine Notes. (2021). Ionic series in mass spectra of trifluoromethyl-substituted heterocycles and cyclopropanes not containing regular fragment groups. Fluorine Notes. Retrieved from [Link]
- National Institute of Standards and Technology. (n.d.). Phenol, 2,4,5-trichloro-. NIST Chemistry WebBook. Retrieved from [Link]
- ResearchGate. (n.d.). (PDF) Interpretation of Mass Spectra. ResearchGate. Retrieved from [Link]
- Defense Technical Information Center. (2008). synthesis and mass spectral analysis of hd degradation products. a computational elucidation of the. DTIC. Retrieved from [Link]

© 2026 BenchChem. All rights reserved.

Need Custom Synthesis?

BenchChem offers custom synthesis for rare earth carbides and specific isotopiclabeling.

Email: info@benchchem.com or Request Quote Online.

Sources

- 1. 2,3,5-trifluorophenol [stenutz.eu]
- 2. Thieme E-Books & E-Journals [thieme-connect.de]
- 3. 19F Nuclear Magnetic Resonance as a Tool To Investigate Microbial Degradation of Fluorophenols to Fluorocatechols and Fluoromuconates - PMC [pmc.ncbi.nlm.nih.gov]
- 4. rsc.org [rsc.org]
- 5. Infrared Spectra and Phototransformations of meta-Fluorophenol Isolated in Argon and Nitrogen Matrices - PMC [pmc.ncbi.nlm.nih.gov]
- 6. Phenol, 2,4,5-trichloro- [webbook.nist.gov]
- 7. uni-saarland.de [uni-saarland.de]
- To cite this document: BenchChem. [spectral data for 2,3,5-Trifluorophenol (NMR, IR, MS)]. BenchChem, [2026]. [Online PDF]. Available at: [https://www.benchchem.com/product/b1587228/docs#spectral-data-for-2-3-5-trifluorophenol-nmr-ir-ms]

Disclaimer & Data Validity:

The information provided in this document is for Research Use Only (RUO) and is strictly not intended for diagnostic or therapeutic procedures. While BenchChem strives to provide accurate protocols, we make no warranties, express or implied, regarding the fitness of this product for every specific experimental setup.

Technical Support: The protocols provided are for reference purposes. Unsure if this reagent suits your experiment?

Need Industrial/Bulk Grade? Request Custom Synthesis Quote

BenchChem

Our mission is to be the trusted global source of essential and advanced chemicals, empowering scientists and researchers to drive progress in science and industry.

Contact

Address: 3281 E Guasti Rd

Ontario, CA 91761, United States

Phone: (601) 213-4426

Email: info@benchchem.com

Contact our Ph.D. Support Team for a compatibility check

© 2026 BenchChem. All rights reserved.