Technical Support Center: Optimizing the Esterification of N-Cbz-beta-alanine

Author: BenchChem Technical Support Team. **Date**: May 2026

Compound of Interest

Compound Name:	*Methyl 3-([(benzyloxy)carbonyl]amino)propanoate*
CAS No.:	*54755-77-0*
Cat. No.:	*B1585376*

Get Quote

Welcome to the technical support center for the esterification of N-Cbz-beta-alanine. This guide is designed for researchers, scientists, and drug development professionals to navigate the complexities of this common yet often challenging reaction. Here, we move beyond simple protocols to provide in-depth, field-proven insights into the "why" behind experimental choices, empowering you to troubleshoot and optimize your synthetic routes effectively.

I. Foundational Principles of N-Cbz-beta-alanine Esterification

The esterification of N-Cbz-beta-alanine is a fundamental transformation in peptide synthesis and the development of various pharmaceutical intermediates. The core of this reaction involves the conversion of a carboxylic acid to an ester in the presence of an alcohol and a catalyst. The N-Cbz (carbobenzyloxy) protecting group is crucial as it prevents the amine from engaging in unwanted side reactions.[1]

© 2026 BenchChem. All rights reserved.

Core Reaction Scheme:

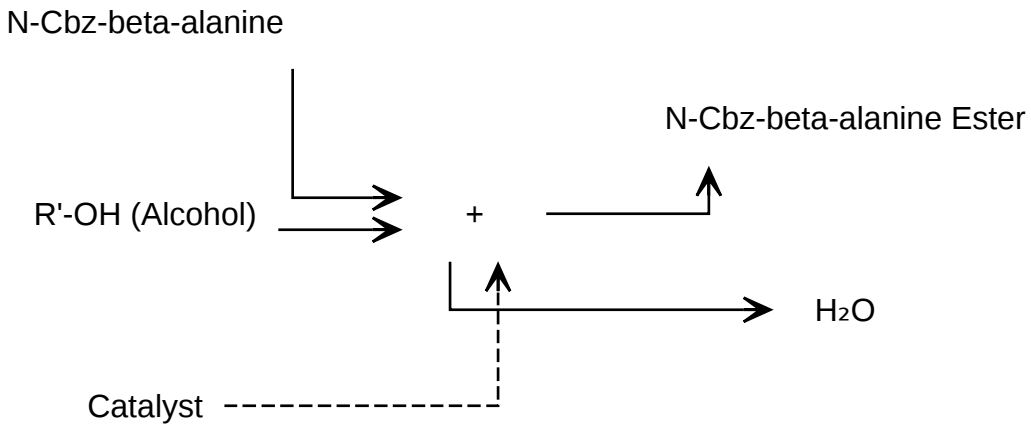

Click to download full resolution via product page

Caption: General Esterification of N-Cbz-beta-alanine.

II. Troubleshooting Guide: Common Issues and Solutions

This section addresses the most frequently encountered challenges during the esterification of N-Cbz-beta-alanine, offering systematic approaches to diagnose and resolve them.

Issue 1: Low or No Product Yield

This is one of the most common frustrations in the lab. A low yield of the desired ester can stem from several factors.

Question: My reaction shows a low conversion of N-Cbz-beta-alanine to its ester. What are the likely causes and how can I improve the yield?

Answer: Low conversion is often multifactorial. Let's break down the potential culprits and their remedies.

A. Inefficient Catalyst Activity:

© 2026 BenchChem. All rights reserved.

- Cause: The choice and handling of the catalyst are paramount. Acid catalysts, such as sulfuric acid or p-toluenesulfonic acid, are commonly used.[2] Their effectiveness can be diminished by the presence of moisture.

- Solution:

  - Ensure Anhydrous Conditions: Use freshly dried solvents and reagents. Molecular sieves can be added to the reaction mixture to scavenge any in-situ generated water.

  - Catalyst Selection: For sensitive substrates, milder catalysts like DCC (N,N'-dicyclohexylcarbodiimide) in the presence of an activating agent like DMAP (4-dimethylaminopyridine) can be more effective.[1]

  - Catalyst Loading: Insufficient catalyst will result in a sluggish reaction. A typical loading for strong acid catalysts is 1-5 mol%.

B. Unfavorable Reaction Equilibrium:

- Cause: Esterification is a reversible reaction. The accumulation of water, a byproduct, can shift the equilibrium back towards the starting materials, thus limiting the yield.

- Solution:

  - Water Removal: Employ a Dean-Stark apparatus to azeotropically remove water as it forms, especially when using solvents like toluene.

  - Excess Alcohol: Using the alcohol as a solvent or in large excess can drive the reaction forward according to Le Chatelier's principle.

C. Sub-Optimal Reaction Conditions:

- Cause: Temperature and reaction time are critical parameters. Insufficient heat may lead to a slow reaction rate, while excessive heat can cause decomposition of the starting material or product.

- Solution:

© 2026 BenchChem. All rights reserved.

- Temperature Optimization: For acid-catalyzed reactions, refluxing in a suitable solvent is common. Start with a moderate temperature (e.g., 80 °C) and monitor the reaction progress by TLC or HPLC.
- Reaction Time: Ensure the reaction is allowed to proceed to completion. Monitor at regular intervals (e.g., every 2-4 hours) until no further consumption of the starting material is observed.

Parameter	Recommendation	Rationale
Catalyst	H_2SO_4, p-TsOH, or DCC/DMAP	Strong acids are effective but can be harsh. DCC/DMAP is milder.
Solvent	Toluene, Dichloromethane (DCM)	Toluene allows for azeotropic water removal. DCM is a good general-purpose solvent.
Temperature	80 °C to reflux	Balances reaction rate with potential for degradation.
Water Removal	Dean-Stark or molecular sieves	Crucial for driving the equilibrium towards the product.

Issue 2: Formation of Side Products

The appearance of unexpected spots on a TLC plate can be disheartening. Identifying and mitigating these side reactions is key to a clean synthesis.

Question: I'm observing multiple byproducts in my reaction mixture. What are the most common side reactions and how can I prevent them?

Answer: Side product formation is often a result of the reactivity of the starting materials and intermediates under the reaction conditions.

A. N-Alkylation:

© 2026 BenchChem. All rights reserved.

- Cause: While the Cbz group protects the primary amine, under certain conditions, especially with more reactive alkylating agents or in the presence of a strong base, N-alkylation can occur.[3]

- Prevention:

  - Controlled Basicity: Avoid the use of strong, non-hindered bases if possible. If a base is necessary for deprotonation, consider a bulky base like diisopropylethylamine (DIPEA).

  - Reaction Temperature: Keep the reaction temperature as low as feasible to minimize this side reaction.

B. Racemization:

- Cause: The stereochemical integrity of the beta-alanine backbone is crucial. Harsh acidic or basic conditions, particularly at elevated temperatures, can lead to racemization at the alpha-carbon.

- Prevention:

  - Mild Conditions: Opt for milder esterification methods when stereochemistry is critical. Enzyme-catalyzed esterification can be an excellent alternative for maintaining stereopurity.[4]

  - Temperature Control: Avoid prolonged heating at high temperatures.

C. Dimerization/Oligomerization:

- Cause: In the presence of coupling agents like DCC, self-condensation of N-Cbz-beta-alanine can occur, leading to the formation of dimers or short oligomers.

- Prevention:

  - Slow Addition: Add the coupling agent slowly to a solution of the carboxylic acid and the alcohol. This maintains a low concentration of the activated acid, favoring reaction with the alcohol over self-condensation.

© 2026 BenchChem. All rights reserved.

- Use of Additives: Including additives like HOBt (Hydroxybenzotriazole) can suppress this side reaction by forming a more stable activated ester intermediate.

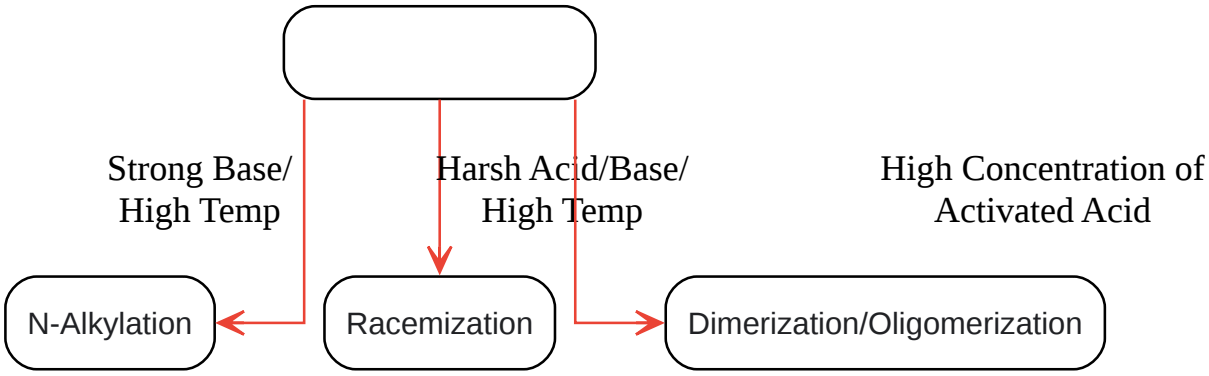

Click to download full resolution via product page

Caption: Common Side Reaction Pathways.

III. Frequently Asked Questions (FAQs)

Q1: What is the best method for purifying the N-Cbz-beta-alanine ester?

A1: The purification method depends on the physical properties of the ester and the nature of the impurities.

- Column Chromatography: Silica gel column chromatography is the most common and effective method for separating the desired ester from unreacted starting materials and byproducts.[2] A gradient elution system, starting with a non-polar solvent (e.g., hexane) and gradually increasing the polarity with a more polar solvent (e.g., ethyl acetate), is typically employed.

- Recrystallization: If the ester is a solid, recrystallization can be a highly effective method for achieving high purity.[1] Common solvent systems include ethyl acetate/hexane and ethanol/water.

- Aqueous Workup: A standard aqueous workup is crucial to remove water-soluble impurities. This typically involves washing the organic layer with a mild base (e.g., saturated sodium bicarbonate solution) to remove unreacted acid, followed by a brine wash.[2]

© 2026 BenchChem. All rights reserved.

Q2: Can I use an enzymatic approach for the esterification of N-Cbz-beta-alanine?

A2: Yes, enzymatic esterification is an excellent "green chemistry" alternative that often provides high selectivity and avoids harsh reaction conditions.[4][5] Lipases are commonly used enzymes for this purpose. The reaction is typically carried out in an organic solvent to shift the equilibrium towards ester formation. This method is particularly advantageous when dealing with sensitive substrates or when strict stereochemical control is required.

Q3: How do I monitor the progress of the reaction?

A3: Thin-Layer Chromatography (TLC) is the most convenient method for monitoring the reaction progress.

- Procedure: Spot the reaction mixture alongside the starting material (N-Cbz-beta-alanine) on a TLC plate.
- Eluent: A mixture of hexane and ethyl acetate (e.g., 7:3 or 1:1) is a good starting point for the mobile phase.
- Visualization: The spots can be visualized under UV light (if the compounds are UV active) and/or by staining with a suitable reagent like potassium permanganate or ninhydrin (after deprotection). The disappearance of the starting material spot and the appearance of a new, less polar product spot indicate the reaction is proceeding. For more quantitative analysis, High-Performance Liquid Chromatography (HPLC) can be used.

IV. Experimental Protocols

Protocol 1: Classical Acid-Catalyzed Esterification (Methyl Ester)

This protocol describes a standard procedure for the synthesis of N-Cbz-beta-alanine methyl ester using sulfuric acid as a catalyst.

- Dissolution: Dissolve N-Cbz-beta-alanine (1.0 eq) in methanol (10 volumes).
- Catalyst Addition: Cool the solution in an ice bath and slowly add concentrated sulfuric acid (0.05 eq).

© 2026 BenchChem. All rights reserved.

- Reaction: Allow the reaction to warm to room temperature and then heat to reflux for 4-6 hours.
- Monitoring: Monitor the reaction progress by TLC until the starting material is consumed.
- Workup: Cool the reaction mixture and neutralize with a saturated solution of sodium bicarbonate.
- Extraction: Extract the product with ethyl acetate (3 x 10 volumes).
- Purification: Combine the organic layers, wash with brine, dry over anhydrous sodium sulfate, and concentrate under reduced pressure. Purify the crude product by silica gel column chromatography.

Protocol 2: DCC/DMAP Mediated Esterification (tert-Butyl Ester)

This method is suitable for alcohols that are sensitive to acidic conditions.

- Dissolution: Dissolve N-Cbz-beta-alanine (1.0 eq), tert-butanol (1.2 eq), and DMAP (0.1 eq) in anhydrous dichloromethane (DCM, 10 volumes).
- Coupling Agent Addition: Cool the solution to 0 °C and add a solution of DCC (1.1 eq) in DCM dropwise over 30 minutes.
- Reaction: Stir the reaction at 0 °C for 1 hour and then at room temperature overnight.
- Filtration: A white precipitate of dicyclohexylurea (DCU) will form. Filter the reaction mixture to remove the DCU.
- Workup: Wash the filtrate with 1N HCl, saturated sodium bicarbonate solution, and brine.
- Purification: Dry the organic layer over anhydrous sodium sulfate, concentrate, and purify by column chromatography.

Caption: Workflow for Esterification Protocols.

© 2026 BenchChem. All rights reserved.

V. References

- Fujisawa Pharmaceutical Co., Ltd. (2003). New processes for producing beta-alanine derivatives. Google Patents. Retrieved from
- Gomes, P. B., et al. (2020). Sustainable Enzymatic Synthesis of a Solketal Ester—Process Optimization and Evaluation of Its Antimicrobial Activity. Molecules, 25(3), 728. Retrieved from [Link]
- Patel, R. N. (2001). Versatile selective α-carboxylic acid esterification of N-protected amino acids and peptides by alcalase. Tetrahedron: Asymmetry, 12(4), 547-558. Retrieved from [Link]
- Sriram, D., & Yogeeswari, P. (2010). Beta-alanine: Design, synthesis and antimicrobial evaluation of synthesized derivatives. Scholars Research Library, 2(4), 438-445. Retrieved from [Link]
- Sureshbabu, V. V., et al. (2014). Selective N-Alkylation of β-alanine Facilitates the Synthesis of a Polyamino Acid-Based Theranostic Nanoagent. Scientific Reports, 4, 5353. Retrieved from [Link]

Need Custom Synthesis?

BenchChem offers custom synthesis for rare earth carbides and specific isotopiclabeling.

Email: info@benchchem.com or Request Quote Online.

Sources

- 1. pdf.benchchem.com [pdf.benchchem.com]
- 2. US20030114488A1 - New processes for producing beta-alanine derivatives - Google Patents [patents.google.com]
- 3. Selective N-Alkylation of β-alanine Facilitates the Synthesis of a Polyamino Acid-Based Theranostic Nanoagent - PMC [pmc.ncbi.nlm.nih.gov]
- 4. researchgate.net [researchgate.net]

© 2026 BenchChem. All rights reserved.

- 5. Sustainable Enzymatic Synthesis of a Solketal Ester—Process Optimization and Evaluation of Its Antimicrobial Activity | MDPI [mdpi.com]
- To cite this document: BenchChem. [Technical Support Center: Optimizing the Esterification of N-Cbz-beta-alanine]. BenchChem, [2026]. [Online PDF]. Available at: [https://www.benchchem.com/product/b1585376/docs#technical-support-center-optimizing-the-esterification-of-n-cbz-beta-alanine]

Disclaimer & Data Validity:

The information provided in this document is for Research Use Only (RUO) and is strictly not intended for diagnostic or therapeutic procedures. While BenchChem strives to provide accurate protocols, we make no warranties, express or implied, regarding the fitness of this product for every specific experimental setup.

Technical Support: The protocols provided are for reference purposes. Unsure if this reagent suits your experiment?

Need Industrial/Bulk Grade? Request Custom Synthesis Quote

BenchChem

Our mission is to be the trusted global source of essential and advanced chemicals, empowering scientists and researchers to drive progress in science and industry.

Contact

Address: 3281 E Guasti Rd

Ontario, CA 91761, United States

Phone: (601) 213-4426

Email: info@benchchem.com

Contact our Ph.D. Support Team for a compatibility check

© 2026 BenchChem. All rights reserved.