Technical Support Center: Selective Bromination of 2,2'-Dimethylbiphenyl

Author: BenchChem Technical Support Team. **Date**: May 2026

Compound of Interest	
Compound Name:	*2,2'-Bis(bromomethyl)-1,1'-biphenyl*
CAS No.:	*38274-14-5*
Cat. No.:	*B1581278*

Get Quote

Welcome to the technical support center for the selective bromination of 2,2'-dimethylbiphenyl. This guide is designed for researchers, scientists, and professionals in drug development who are navigating the complexities of this specific electrophilic aromatic substitution. Here, you will find in-depth troubleshooting advice and frequently asked questions to help you overcome common challenges and achieve your desired synthetic outcomes.

Introduction to the Challenges

The selective bromination of 2,2'-dimethylbiphenyl presents a unique set of challenges primarily due to the steric hindrance imposed by the two methyl groups at the 2 and 2' positions. These groups restrict rotation around the biphenyl linkage, influencing the conformation of the molecule and sterically shielding the ortho positions. The primary goal is typically to achieve selective monobromination at the electronically activated para positions (4 and 4'), while avoiding polybromination and side reactions. This guide provides practical solutions to common issues encountered during this process.

Troubleshooting Guide

© 2026 BenchChem. All rights reserved.

Problem 1: Low Yield of the Desired Monobrominated Product

You are observing a low yield of 4-bromo-2,2'-dimethylbiphenyl or 4,4'-dibromo-2,2'-dimethylbiphenyl, with a significant amount of starting material remaining.

Possible Causes and Solutions:

- Insufficient Electrophilicity of the Brominating Agent: The electron-donating methyl groups activate the aromatic rings, but a sufficiently powerful electrophile is still required to overcome the activation energy of the reaction.[1][2]
  - Solution: If using N-Bromosuccinimide (NBS) alone, consider the addition of a catalytic amount of a strong acid, such as sulfuric acid or perchloric acid, to generate a more potent brominating species. For bromination with molecular bromine (Br_2), ensure the use of an effective Lewis acid catalyst like iron(III) bromide ($FeBr_3$).[3][4] The catalyst polarizes the Br-Br bond, increasing its electrophilicity.[2][4]
- Inadequate Reaction Temperature: The reaction may be too slow at lower temperatures.
  - Solution: Gradually increase the reaction temperature while monitoring the reaction progress by Thin Layer Chromatography (TLC) or Gas Chromatography (GC). Be cautious, as excessive heat can lead to the formation of byproducts.
- Poor Solubility of Reagents: If the reagents are not well-dissolved, the reaction kinetics will be slow.
  - Solution: Choose a solvent that effectively dissolves both 2,2'-dimethylbiphenyl and the brominating agent. Dichloromethane (CH_2Cl_2), carbon tetrachloride (CCl_4), and acetic acid are common choices. For reactions with NBS, polar aprotic solvents like N,N-dimethylformamide (DMF) can be effective, though they can also influence selectivity.[5]

Experimental Protocol: Enhancing Yield with a Lewis Acid Catalyst

- Dissolve 2,2'-dimethylbiphenyl (1 equivalent) in anhydrous dichloromethane in a round-bottom flask equipped with a magnetic stirrer and a dropping funnel.

© 2026 BenchChem. All rights reserved.

- Add iron(III) bromide ($FeBr_3$) (0.1 equivalents) to the solution and stir until it dissolves.
- Cool the mixture to 0 °C in an ice bath.
- Slowly add a solution of molecular bromine (1.1 equivalents for monobromination) in dichloromethane from the dropping funnel over 30 minutes.
- Allow the reaction to stir at 0 °C for 1 hour and then warm to room temperature. Monitor the reaction's progress by TLC.
- Upon completion, quench the reaction by adding a saturated aqueous solution of sodium thiosulfate to consume excess bromine.
- Separate the organic layer, wash with brine, dry over anhydrous magnesium sulfate, and concentrate under reduced pressure to obtain the crude product.

Problem 2: Poor Regioselectivity - Formation of Multiple Isomers

You are obtaining a mixture of brominated products, including ortho and meta isomers, in addition to the desired para-substituted product.

Possible Causes and Solutions:

- Steric Hindrance: The methyl groups at the 2 and 2' positions sterically hinder the ortho positions (3, 3', 6, and 6'), making the para positions (4 and 4') the most likely sites for electrophilic attack. However, under forcing conditions, substitution at other positions can occur. The biphenyl system itself directs incoming electrophiles to the ortho and para positions.[3][6]
  - Solution: Employ milder reaction conditions. Lowering the reaction temperature can significantly improve selectivity. Using a bulkier brominating agent can also enhance selectivity for the less sterically hindered para position.
- Reaction Mechanism: The stability of the carbocation intermediate (arenium ion) plays a crucial role in determining the regioselectivity.[1][5] Attack at the para position leads to a more stabilized intermediate.

© 2026 BenchChem. All rights reserved.

- Solution: Using a less reactive brominating system can increase the selectivity for the pathway with the most stable intermediate. For instance, NBS in the presence of a silica gel support can offer higher para-selectivity.[7]

Workflow for Optimizing Regioselectivity

Caption: A logical workflow for troubleshooting and optimizing the regioselectivity of the bromination reaction.

Problem 3: Formation of Polybrominated Byproducts

You are observing the formation of dibrominated, tribrominated, or even more highly brominated products, even when targeting monobromination.

Possible Causes and Solutions:

- Excess Brominating Agent: The most common cause of polybromination is using too much of the brominating reagent.
  - Solution: Carefully control the stoichiometry. Use no more than 1.05-1.1 equivalents of the brominating agent for monobromination. For the synthesis of 4,4'-dibromo-2,2'-dimethylbiphenyl, use 2.1-2.2 equivalents.
- High Reactivity of the Monobrominated Product: The first bromine atom deactivates the ring it is attached to, but the other ring remains activated by its methyl group, making it susceptible to further bromination.
  - Solution: Add the brominating agent slowly and at a low temperature to allow for selective reaction with the starting material before the product can react further. Removing the product from the reaction mixture as it is formed, if feasible, can also prevent over-bromination.

Problem 4: Benzylic Bromination as a Side Reaction

You are noticing the formation of products where a bromine atom has substituted a hydrogen on one of the methyl groups.

Possible Causes and Solutions:

© 2026 BenchChem. All rights reserved.

- Radical Reaction Conditions: Benzylic bromination occurs via a free-radical mechanism, which is often initiated by light or radical initiators like AIBN.[8][9][10]
    - Solution: Ensure the reaction is carried out in the dark and that the reagents are free from radical initiators. If using NBS, which can participate in both electrophilic and radical pathways, avoid conditions that favor radical reactions (e.g., high temperatures, UV light, and non-polar solvents like CCl_4 without an acid catalyst).[8][11]

Table 1: Brominating Agents and Their Typical Reaction Pathways

Brominating Agent	Typical Conditions	Primary Mechanism	Likelihood of Benzylic Bromination
Br_2 / $FeBr_3$	Dark, 0°C to RT	Electrophilic Aromatic Substitution	Low
NBS / H_2SO_4 (catalytic)	Dark, in a polar solvent	Electrophilic Aromatic Substitution	Low
NBS / AIBN / CCl_4	Reflux, with light	Free Radical Substitution	High
NBS (alone)	Varies	Can be ambiguous	Moderate, depending on conditions

Frequently Asked Questions (FAQs)

Q1: What is the best brominating agent for the selective monobromination of 2,2'-dimethylbiphenyl?

For selective aromatic monobromination, a combination of molecular bromine (Br_2) with a Lewis acid catalyst like $FeBr_3$ is a standard and effective choice.[4] Alternatively, N-Bromosuccinimide (NBS) in the presence of an acid catalyst can also be used.[7] The choice may depend on the specific requirements of your synthesis and the available reagents.

Q2: How can I selectively synthesize 4,4'-dibromo-2,2'-dimethylbiphenyl?

© 2026 BenchChem. All rights reserved.

To synthesize the 4,4'-dibromo product, you will need to use at least two equivalents of the brominating agent. A common procedure involves using slightly more than two equivalents (e.g., 2.2 equivalents) of Br_2 with a catalytic amount of $FeBr_3$. The reaction may require slightly harsher conditions (e.g., a longer reaction time or a slightly elevated temperature) to drive the reaction to completion.

Q3: Why is it difficult to brominate the positions ortho to the methyl groups?

The methyl groups at the 2 and 2' positions create significant steric hindrance, making it difficult for the bulky electrophile (the brominating agent) to approach the ortho positions (3, 3', 6, and 6'). This steric repulsion raises the activation energy for substitution at these positions, making the para positions the preferred sites of reaction.

Q4: Can I use elemental bromine without a catalyst?

While elemental bromine can brominate highly activated aromatic rings, the reaction with 2,2'-dimethylbiphenyl is typically slow and may require harsh conditions without a catalyst. A Lewis acid catalyst like $FeBr_3$ is necessary to polarize the bromine molecule, making it a much more effective electrophile for this substitution.[2]

Mechanism of Lewis Acid Catalyzed Bromination

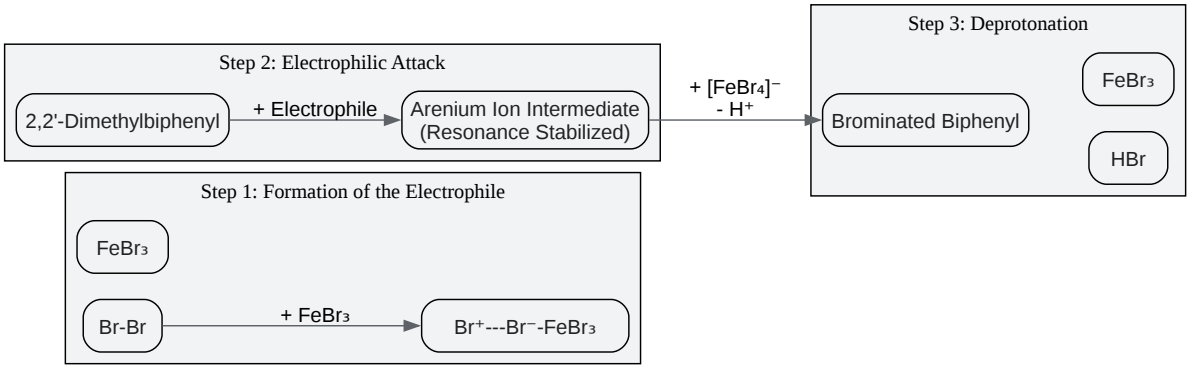

© 2026 BenchChem. All rights reserved.

Click to download full resolution via product page

Caption: The three-step mechanism for the $FeBr_3$-catalyzed bromination of an aromatic ring.

Q5: How do I purify the final product?

The crude product can be purified by recrystallization from a suitable solvent system (e.g., ethanol/water or hexanes) or by column chromatography on silica gel using a non-polar eluent such as hexanes or a mixture of hexanes and ethyl acetate.

References

- University of Glasgow. (n.d.). Selectivity of Aryl and Benzylic Bromination.
- Homework.Study.com. (n.d.).
- ResearchGate. (n.d.). Bromination of 6 a. Reaction conditions: NBS (2.1 equiv), 1,2-DME, rt,....
- Wikipedia. (2023). N-Bromosuccinimide.
- YouTube. (2019). Aromatic Electrophilic Substitution on Biphenyl: Basic concept. reaction mechanism and examples.
- PMC. (n.d.).
- Chemistry LibreTexts. (2022). 16.
- TopSCHOLAR. (n.d.).
- Organic Chemistry Portal. (n.d.). N-Bromosuccinimide (NBS).
- Reddit. (2016). Can not get the selectivity of a aromatic bromination to behave, also low yielding. Am I just hosed here?.
- YouTube. (2014).
- BYJU'S. (n.d.).
- Chemistry LibreTexts. (2024). 16.
- PubChem. (n.d.). 4,4'-Dibromo-2,2'-dimethylbiphenyl.
- YouTube. (2021). NBS (n-bromosuccinimide)
- Scientific Update. (2022).
- YouTube. (2019).
- CECRI, Karaikudi. (2005). A simple and regioselective a-bromination of alkyl aromatic compounds by two-phase electrolysis.
- Google Patents. (n.d.).
- ResearchGate. (2015). Iron(III)
- Benchchem. (n.d.).
- ACS Figshare. (2021).
- Organic Syntheses Procedure. (n.d.). Biphenyl, 3,3'-dimethyl.

© 2026 BenchChem. All rights reserved.

- NIST WebBook. (n.d.). 2,2'-Dimethylbiphenyl.
- ResearchGate. (n.d.). Photochemical bromination of 2,5-dimethylbenzoic acid as key step of an improved alkyne-functionalized blue box synthesis.
- Boron Molecular. (n.d.). Buy 2,2'-Dimethyl-biphenyl.
- Bentham Science. (n.d.). Practical Bromination Approach to the Synthesis of Dimethyl 6,6'-Bis(bromomethyl)
- PubChem. (n.d.). 2,2'-Dimethylbiphenyl.
- The Journal of Organic Chemistry. (n.d.). Selective preparation. 37.
- ACS Publications. (2021).

Need Custom Synthesis?

BenchChem offers custom synthesis for rare earth carbides and specific isotopiclabeling.

Email: info@benchchem.com or Request Quote Online.

Sources

- 1. chem.libretexts.org [chem.libretexts.org]
- 2. chem.libretexts.org [chem.libretexts.org]
- 3. homework.study.com [homework.study.com]
- 4. byjus.com [byjus.com]
- 5. theses.gla.ac.uk [theses.gla.ac.uk]
- 6. m.youtube.com [m.youtube.com]
- 7. Regioselective Electrophilic Aromatic Bromination: Theoretical Analysis and Experimental Verification - PMC [pmc.ncbi.nlm.nih.gov]
- 8. N-Bromosuccinimide - Wikipedia [en.wikipedia.org]
- 9. youtube.com [youtube.com]
- 10. krc.cecri.res.in [krc.cecri.res.in]
- 11. N-Bromosuccinimide (NBS) [organic-chemistry.org]
- To cite this document: BenchChem. [Technical Support Center: Selective Bromination of 2,2'-Dimethylbiphenyl]. BenchChem, [2026]. [Online PDF]. Available at: [https://www.benchchem.com/product/b1581278/docs#technical-support-center-selective-bromination-of-2-2-dimethylbiphenyl]

© 2026 BenchChem. All rights reserved.

Disclaimer & Data Validity:

The information provided in this document is for Research Use Only (RUO) and is strictly not intended for diagnostic or therapeutic procedures. While BenchChem strives to provide accurate protocols, we make no warranties, express or implied, regarding the fitness of this product for every specific experimental setup.

Technical Support: The protocols provided are for reference purposes. Unsure if this reagent suits your experiment?

Need Industrial/Bulk Grade? Request Custom Synthesis Quote

BenchChem

Our mission is to be the trusted global source of essential and advanced chemicals, empowering scientists and researchers to drive progress in science and industry.

Contact

Address: 3281 E Guasti Rd

Ontario, CA 91761, United States

Phone: (601) 213-4426

Email: info@benchchem.com

Contact our Ph.D. Support Team for a compatibility check

© 2026 BenchChem. All rights reserved.