Comparative Guide: Steric and Electronic Tuning in Silylation

Author: BenchChem Technical Support Team. **Date**: May 2026

Compound of Interest	
Compound Name:	*Dibutyldichlorosilane*
CAS No.:	*3449-28-3*
Cat. No.:	*B1580878*

Get Quote

Alternatives to **Dibutyldichlorosilane** (DBCS)

Executive Summary: The DBCS Dilemma

Dibutyldichlorosilane (DBCS) has long served as a "middle-ground" reagent for the simultaneous protection of 1,2- and 1,3-diols. It forms cyclic silylenes that are more stable than trimethylsilyl (TMS) ethers but lack the extreme robustness of tert-butyldiphenylsilyl (TBDPS) groups.

However, DBCS presents specific challenges in modern drug development:

- Hydrolytic Instability: The

  -butyl chains provide insufficient steric shielding against nucleophilic attack at extreme pH.
- Corrosivity: The release of HCl requires stoichiometric base, which can be incompatible with acid-sensitive substrates.
- Lack of Orthogonality: Its deprotection profile often overlaps with other common silyl ethers.

© 2026 BenchChem. All rights reserved.

This guide analyzes two superior alternatives that occupy opposite ends of the stability spectrum: Di-tert-butylsilyl bis(trifluoromethanesulfonate) (High Stability) and Dichlorodiphenylsilane (Orthogonal Lability).

Mechanistic Insight: The -Si Pathway

To select the correct alternative, one must understand the silylation mechanism. Unlike carbon, silicon allows for hypervalency. The reaction proceeds via an associative

-Si mechanism involving a pentacoordinate transition state.

Key Insight: The rate and success of silylation are dictated by the "Leaving Group Ability" (Triflate vs. Chloride) and the "Steric Aperture" (access to the Si center).

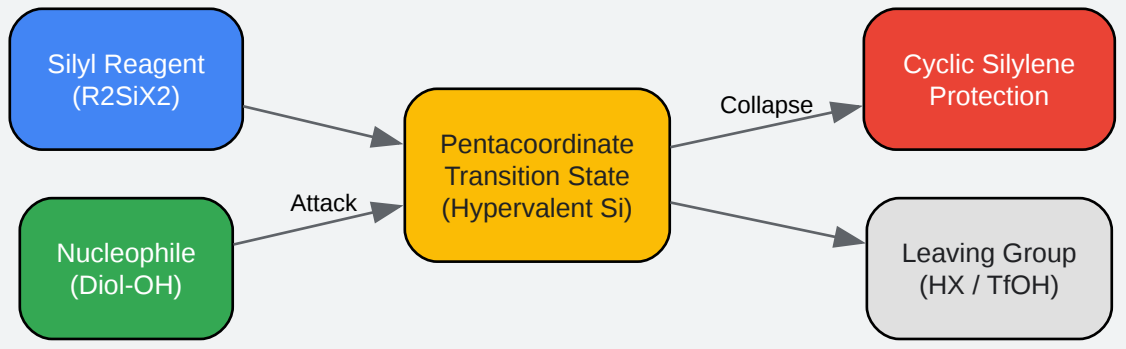

Click to download full resolution via product page

Figure 1: The associative mechanism of silylation.[1] Bulky R-groups (t-Butyl) retard the formation of the transition state, necessitating a better leaving group (Triflate) to drive the reaction.

Critical Comparison of Alternatives

The following table contrasts DBCS with its primary alternatives. Note the critical distinction between the chloride and triflate forms of the di-tert-butyl analog.

© 2026 BenchChem. All rights reserved.

Feature	Dibutyldichlorosilane (DBCS)	Di-tert-butylsilyl bis(triflate) (DTBS)	Dichlorodiphenylsilane (DPS)
Primary Utility	General purpose 1,2-diol protection	High Stability protection for crowded diols	Acid-Labile protection / UV-active tag
Reagent Form	Chloride ( )	Triflate ( )	Chloride ( )
Steric Bulk	Moderate	High (Steric Fortress)	Low/Moderate (Planar rings)
Acid Stability	Moderate	Excellent (Resists pH 4)	Low (Cleaves in mild acid)
Base Stability	Good	Excellent (Resists pH 10)	Good
Deprotection	or Acid	(Requires forcing)	or mild Acid
Cost	Low	High	Moderate

Technical Pitfall: The Chloride Trap

Researchers often attempt to substitute DBCS with Di-tert-butyldichlorosilane (

) to gain stability. This fails. The steric bulk of two t-butyl groups renders the silicon center inaccessible to alcohols when the leaving group is a poor nucleofuge like chloride. You must use the triflate (

) to successfully install the di-tert-butylsilylene group [1].

Decision Matrix: Selecting the Reagent

© 2026 BenchChem. All rights reserved.

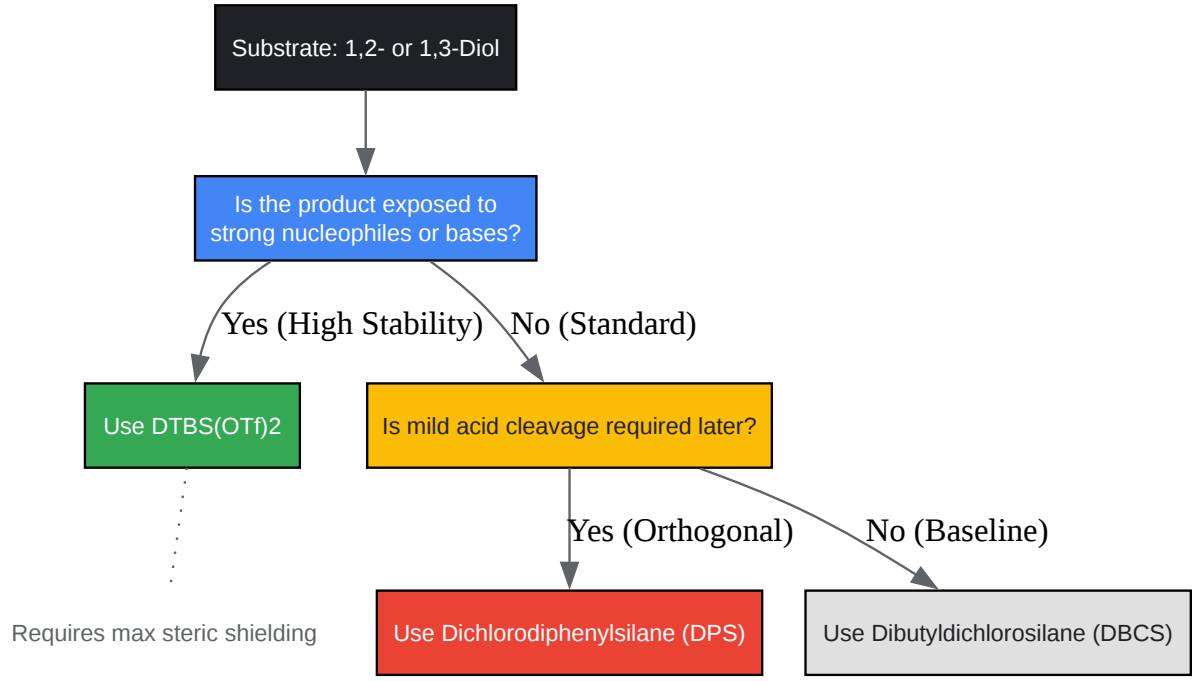

Click to download full resolution via product page

Figure 2: Decision workflow for selecting the appropriate silylating agent based on downstream processing conditions.

Experimental Protocols

Protocol A: High-Stability Protection with DTBS(OTf)$_2$

Best for: Nucleosides, complex natural products, and substrates undergoing harsh subsequent reactions (e.g., PDC oxidation).

Reagents:

- Substrate (1.0 equiv)
- Di-tert-butylsilyl bis(trifluoromethanesulfonate) (1.2 equiv)[2]
- 2,6-Lutidine (3.0 equiv) – Crucial: Imidazole is often insufficient for triflates.
- DMF (Anhydrous)

© 2026 BenchChem. All rights reserved.

Method:

- Dissolve the diol substrate in anhydrous DMF (0.1 M concentration) under Argon.
- Cool the solution to 0°C.
- Add 2,6-lutidine via syringe.
- Add $DTBS(OTf)_2$ dropwise over 5 minutes. Caution: Exothermic.
- Allow to warm to 25°C and stir for 1–2 hours.
- Workup: Quench with water. Extract with EtOAc.[2] Wash organic layer with dilute HCl (to remove lutidine) then brine.
- Purification: Flash chromatography (Silica gel). Note: DTBS derivatives are highly stable on silica [2].

Protocol B: Orthogonal Protection with Dichlorodiphenylsilane (DPS)

Best for: Temporary protection where mild acidic removal is desired without affecting alkyl silyl ethers.

Reagents:

- Substrate (1.0 equiv)
- Dichlorodiphenylsilane (1.1 equiv)
- Imidazole (2.5 equiv)
- CH_2Cl_2 or DMF

Method:

- Dissolve substrate and imidazole in dry CH_2Cl_2.
- Add Dichlorodiphenylsilane dropwise at 0°C.

© 2026 BenchChem. All rights reserved.

- Stir at Room Temperature for 4–12 hours.
- Workup: Dilute with CH_2Cl_2, wash with water and brine. Dry over Na_2SO_4.
- Validation: The product will be UV active, aiding TLC monitoring (unlike DBCS derivatives) [3].

Performance Data: Stability Profiles

The following data illustrates the hydrolytic half-life (

) of the protected diols under stress conditions.

Protecting Group	pH 1 (Acid Hydrolysis)	pH 12 (Base Hydrolysis)	Oxidative Stability (PDC/Jones)
DBCS (Butyl)	< 1 hour	~ 4 hours	Good
DTBS (t-Butyl)	> 24 hours	Stable	Excellent
DPS (Phenyl)	< 10 mins (Labile)	Stable	Good

Data synthesized from comparative solvolysis studies of silyl ethers [4].

References

- Corey, E. J., & Hopkins, P. B. (1982).[2] Diisopropylsilyl ditriflate and di-tert-butylsilyl ditriflate.[2] New reagents for the protection of diols.[2] Tetrahedron Letters, 23(47), 4871–4874.[2] Link
- TCI Chemicals. (n.d.). Di-tert-butylsilyl Bis(trifluoromethanesulfonate) Product Guide. TCI Chemicals. Link
- Gelest, Inc. (n.d.). Diphenyldichlorosilane Product Data and Hydrophobicity Guide. Gelest. Link
- Crouch, R. D. (2013). Selective Deprotection of Silyl Ethers. Synthesis, 45(18), 2484-2496. Link

© 2026 BenchChem. All rights reserved.

Need Custom Synthesis?

BenchChem offers custom synthesis for rare earth carbides and specific isotopiclabeling.

Email: info@benchchem.com or Request Quote Online.

Sources

- 1. CAS 80-10-4: Dichlorodiphenylsilane | CymitQuimica [cymitquimica.com]
- 2. scribd.com [scribd.com]
- To cite this document: BenchChem. [Comparative Guide: Steric and Electronic Tuning in Silylation]. BenchChem, [2026]. [Online PDF]. Available at: [https://www.benchchem.com/product/b1580878/docs#comparative-guide-steric-and-electronic-tuning-in-silylation]

Disclaimer & Data Validity:

The information provided in this document is for Research Use Only (RUO) and is strictly not intended for diagnostic or therapeutic procedures. While BenchChem strives to provide accurate protocols, we make no warranties, express or implied, regarding the fitness of this product for every specific experimental setup.

Technical Support: The protocols provided are for reference purposes. Unsure if this reagent suits your experiment?

Need Industrial/Bulk Grade? Request Custom Synthesis Quote

BenchChem

Our mission is to be the trusted global source of essential and advanced chemicals, empowering scientists and researchers to drive progress in science and industry.

Contact

Address: 3281 E Guasti Rd

Ontario, CA 91761, United States

Phone: (601) 213-4426

Email: info@benchchem.com

© 2026 BenchChem. All rights reserved.

Contact our Ph.D. Support Team for a compatibility check

© 2026 BenchChem. All rights reserved.