Application Notes and Protocols for the Analytical Characterization of 2-Propylaniline

Author: BenchChem Technical Support Team. **Date**: April 2026

Compound of Interest

Compound Name:	*2-Propylaniline*
CAS No.:	*1821-39-2*
Cat. No.:	*B158001*

Get Quote

For Researchers, Scientists, and Drug Development Professionals

These application notes provide a comprehensive overview of the analytical techniques for the qualitative and quantitative characterization of **2-propylaniline**. Detailed protocols for Gas Chromatography-Mass Spectrometry (GC-MS), High-Performance Liquid Chromatography (HPLC), Nuclear Magnetic Resonance (NMR) Spectroscopy, and Fourier-Transform Infrared (FTIR) Spectroscopy are presented to ensure accurate and reproducible results in research and quality control settings.

Physicochemical and Purity Data of 2-Propylaniline

A summary of the key physicochemical properties and typical purity specifications for **2-propylaniline** is provided below for easy reference.

© 2026 BenchChem. All rights reserved.

Property	Value	Reference
Molecular Formula	$C_9H_{13}N$	--INVALID-LINK--
Molecular Weight	135.21 g/mol	--INVALID-LINK--
Appearance	Colorless to light yellow clear liquid	--INVALID-LINK--
Boiling Point	222-224 °C (lit.)	--INVALID-LINK--
Density	0.96 g/mL at 25 °C (lit.)	--INVALID-LINK--
Refractive Index (n20/D)	1.547 (lit.)	--INVALID-LINK--
CAS Number	1821-39-2	--INVALID-LINK--

Analytical Technique	Purity Specification	Supplier Example
Gas Chromatography (GC)	≥97%	--INVALID-LINK--
Gas Chromatography (GC)	Min. 98.0%	--INVALID-LINK--
Not Specified	99.00%	--INVALID-LINK--

Gas Chromatography-Mass Spectrometry (GC-MS) Analysis

GC-MS is a powerful technique for the separation, identification, and quantification of **2-propylaniline** and its potential impurities. The following protocol outlines a general method that can be adapted for specific instrumentation and analytical needs.

Experimental Protocol

1. Sample Preparation:

- Accurately weigh approximately 10 mg of the **2-propylaniline** sample.
- Dissolve the sample in 10 mL of a suitable volatile solvent such as dichloromethane or ethyl acetate to obtain a concentration of 1 mg/mL.

© 2026 BenchChem. All rights reserved.

- For quantitative analysis, prepare a series of calibration standards of **2-propylaniline** in the same solvent. An internal standard (e.g., N-methylaniline) can be added to both samples and standards for improved accuracy.

2. GC-MS Instrumentation and Conditions:

Parameter	Recommended Setting
GC System	Agilent 7890B or equivalent
Mass Spectrometer	Agilent 5977A or equivalent
Column	HP-5ms (30 m x 0.25 mm, 0.25 µm film thickness) or equivalent
Carrier Gas	Helium at a constant flow rate of 1.0 mL/min
Injector Temperature	250 °C
Injection Volume	1 µL (split or splitless mode depending on concentration)
Oven Temperature Program	Initial: 80 °C, hold for 2 min; Ramp: 10 °C/min to 280 °C, hold for 5 min
MS Transfer Line Temp.	280 °C
Ion Source Temperature	230 °C
Ionization Mode	Electron Ionization (EI) at 70 eV
Mass Scan Range	40-450 amu

3. Data Analysis:

- The purity of **2-propylaniline** is determined by calculating the peak area percentage from the total ion chromatogram (TIC).

- Identification of **2-propylaniline** is confirmed by comparing its mass spectrum with a reference spectrum (e.g., NIST library). The expected molecular ion peak is at m/z 135, with a prominent fragment at m/z 106.[1]

© 2026 BenchChem. All rights reserved.

- For quantitative analysis, a calibration curve is generated by plotting the peak area ratio of **2-propylaniline** to the internal standard against the concentration of the calibration standards.

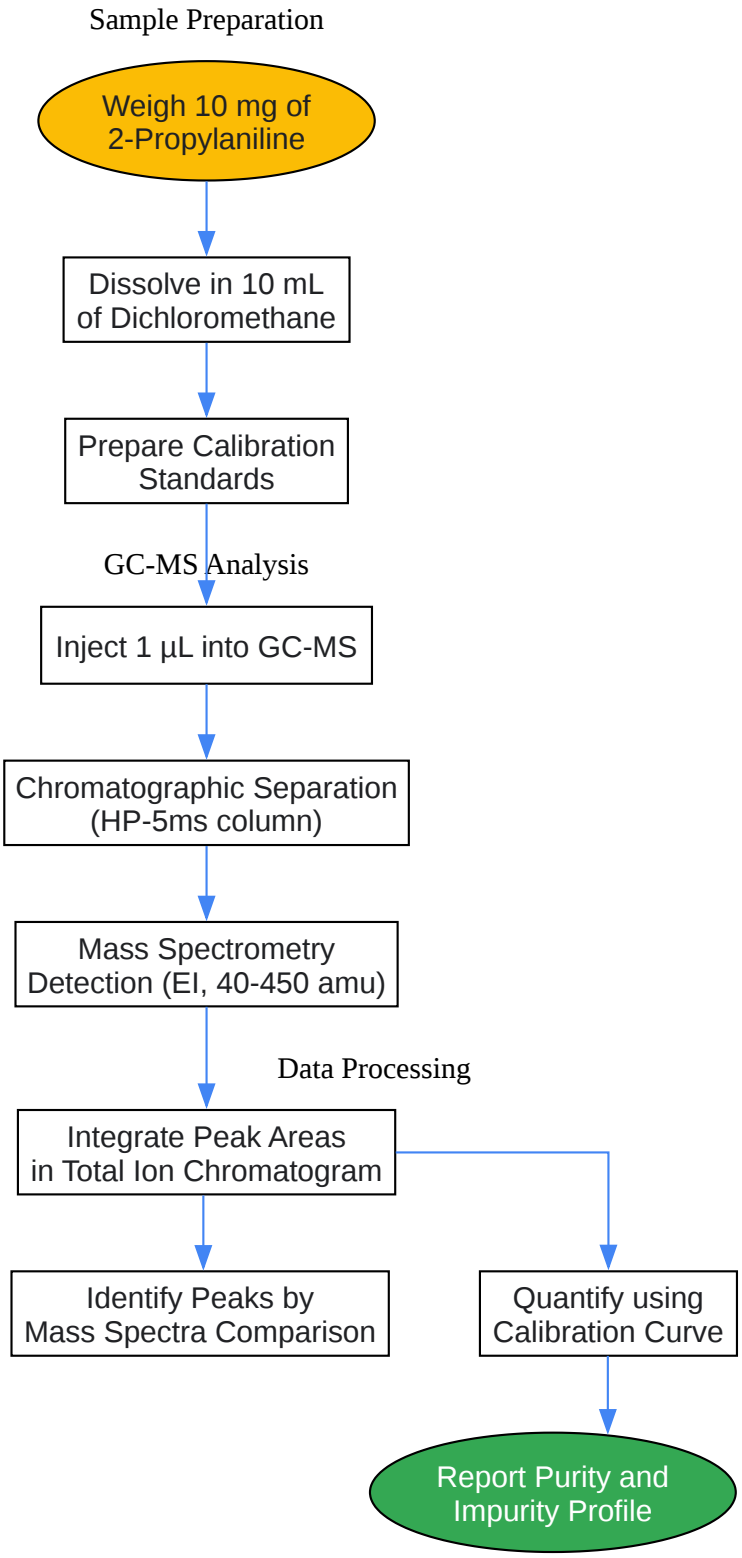

© 2026 BenchChem. All rights reserved.

Click to download full resolution via product page

GC-MS Analysis Workflow for **2-Propylaniline**.

High-Performance Liquid Chromatography (HPLC) Analysis

HPLC is a versatile technique for the purity assessment of **2-propylaniline**, particularly for analyzing non-volatile impurities. A reversed-phase method is typically employed.

Experimental Protocol

1. Sample Preparation:

- Prepare a stock solution of **2-propylaniline** at a concentration of 1 mg/mL in methanol or acetonitrile.
- For analysis, dilute the stock solution with the mobile phase to a suitable concentration (e.g., 10-100 µg/mL).
- Prepare a series of calibration standards by serially diluting the stock solution with the mobile phase.

2. HPLC Instrumentation and Conditions:

© 2026 BenchChem. All rights reserved.

Parameter	Recommended Setting
HPLC System	Agilent 1260 Infinity II or equivalent with UV/DAD detector
Column	C18 reversed-phase column (e.g., 4.6 x 150 mm, 5 µm particle size)
Mobile Phase	Isocratic: Acetonitrile:Water (60:40 v/v) or a suitable gradient
Flow Rate	1.0 mL/min
Column Temp.	30 °C
Injection Volume	10 µL
Detection	UV at 254 nm

3. Data Analysis:

- Identify the **2-propylaniline** peak by comparing its retention time with that of a reference standard.
- Purity is typically determined by area normalization.
- For accurate quantification, construct a calibration curve by plotting the peak area versus the concentration of the standards.

© 2026 BenchChem. All rights reserved.

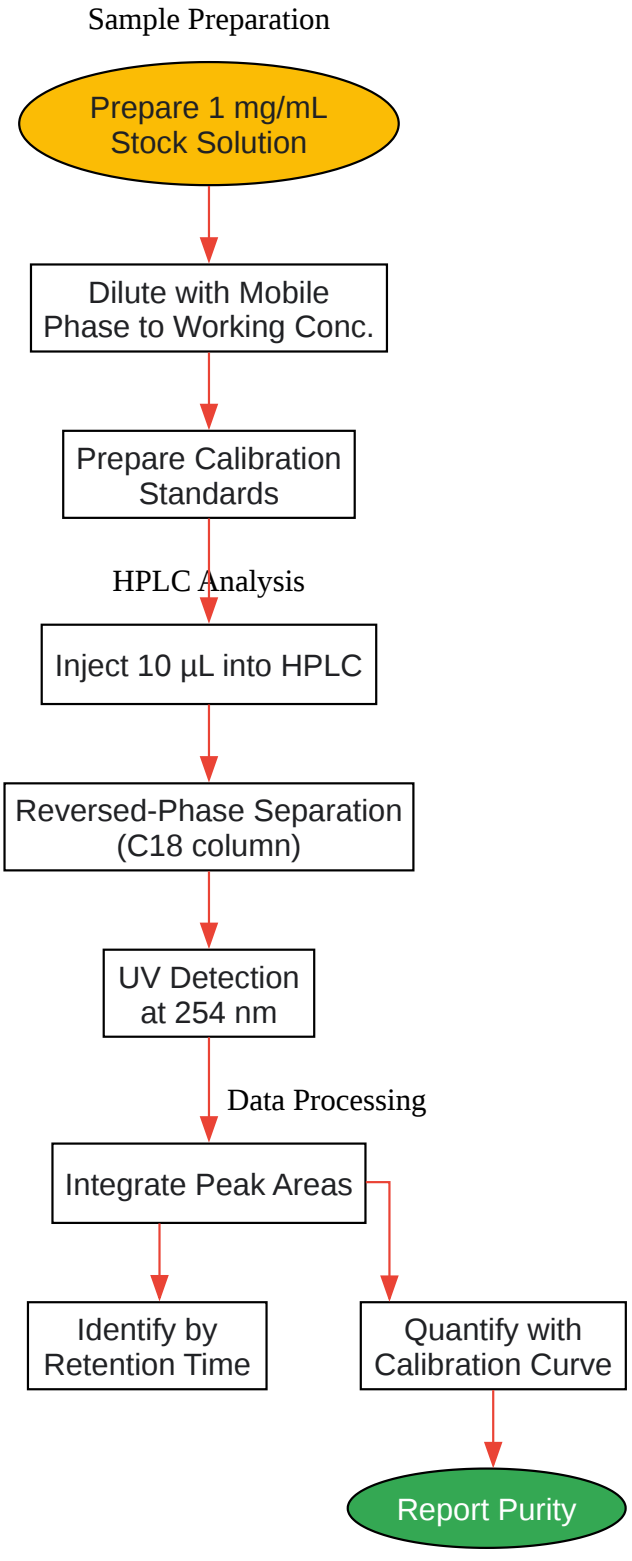

Click to download full resolution via product page

HPLC Analysis Workflow for **2-Propylaniline**.

© 2026 BenchChem. All rights reserved.

Nuclear Magnetic Resonance (NMR) Spectroscopy

NMR spectroscopy is an essential tool for the structural elucidation and confirmation of **2-propylaniline**. Both ^{1}H and ^{13}C NMR are routinely performed.

Experimental Protocol

1. Sample Preparation:

- For ^{1}H NMR, dissolve 5-25 mg of **2-propylaniline** in approximately 0.6-0.7 mL of a deuterated solvent (e.g., Chloroform-d, $CDCl_3$).
- For ^{13}C NMR, a more concentrated sample (50-100 mg) may be required.
- Add a small amount of an internal standard (e.g., tetramethylsilane, TMS) for chemical shift referencing (0 ppm).
- Transfer the solution to a clean 5 mm NMR tube.

2. NMR Instrumentation and Parameters:

Parameter	^{1}H NMR	^{13}C NMR
Spectrometer	Bruker 400 MHz or equivalent	Bruker 100 MHz or equivalent
Solvent	$CDCl_3$	$CDCl_3$
Pulse Program	Standard single pulse (zg30)	Standard single pulse with proton decoupling (zgpg30)
Number of Scans	16-64	1024 or more
Relaxation Delay (d1)	1-2 s	2-5 s
Spectral Width	~12 ppm	~220 ppm

3. Data Analysis:

- Process the raw data (FID) with Fourier transformation, phase correction, and baseline correction.

© 2026 BenchChem. All rights reserved.

- Integrate the signals in the ^{1}H NMR spectrum to determine the relative number of protons.
- Assign the peaks in both ^{1}H and ^{13}C spectra to the corresponding atoms in the **2-propylaniline** structure. A ^{1}H NMR spectrum of **2-propylaniline** is available for reference.[2]

© 2026 BenchChem. All rights reserved.

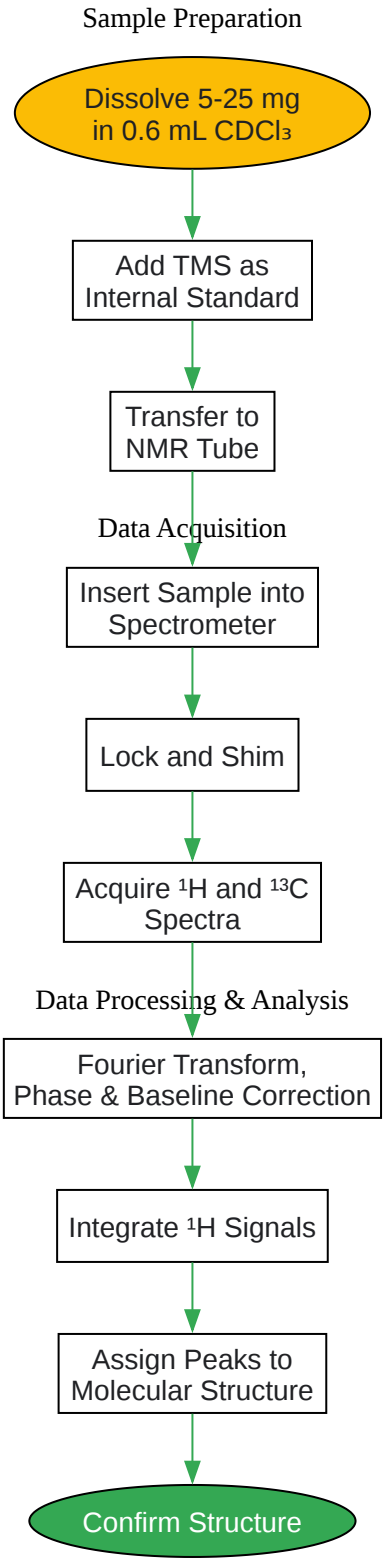

Click to download full resolution via product page

NMR Spectroscopy Workflow for **2-Propylaniline**.

© 2026 BenchChem. All rights reserved.

Fourier-Transform Infrared (FTIR) Spectroscopy

FTIR spectroscopy is used to identify the functional groups present in **2-propylaniline**, thereby confirming its chemical identity.

Experimental Protocol

1. Sample Preparation:

- As **2-propylaniline** is a liquid, it can be analyzed directly as a neat liquid.
- Place a small drop of the sample between two potassium bromide (KBr) or sodium chloride (NaCl) plates to form a thin film.
- Alternatively, use an Attenuated Total Reflectance (ATR) accessory by placing a drop of the liquid directly onto the ATR crystal.

2. FTIR Instrumentation and Parameters:

Parameter	Recommended Setting
Spectrometer	PerkinElmer Spectrum Two or equivalent
Accessory	Transmission (KBr plates) or ATR
Spectral Range	4000-400 cm^{-1}
Resolution	4 cm^{-1}
Number of Scans	16-32

3. Data Analysis:

- Identify the characteristic absorption bands corresponding to the functional groups in **2-propylaniline**.
- N-H stretch: Two bands are expected for the primary amine in the 3400-3300 cm^{-1} region.
- C-H stretch (aromatic): Bands are typically observed above 3000 cm^{-1}.

© 2026 BenchChem. All rights reserved.

- C-H stretch (aliphatic): Bands are typically observed below 3000 cm^{-1}.
- C=C stretch (aromatic): Peaks are expected in the 1600-1450 cm^{-1} region.
- C-N stretch: An absorption band is expected in the 1335-1250 cm^{-1} range for aromatic amines.

© 2026 BenchChem. All rights reserved.

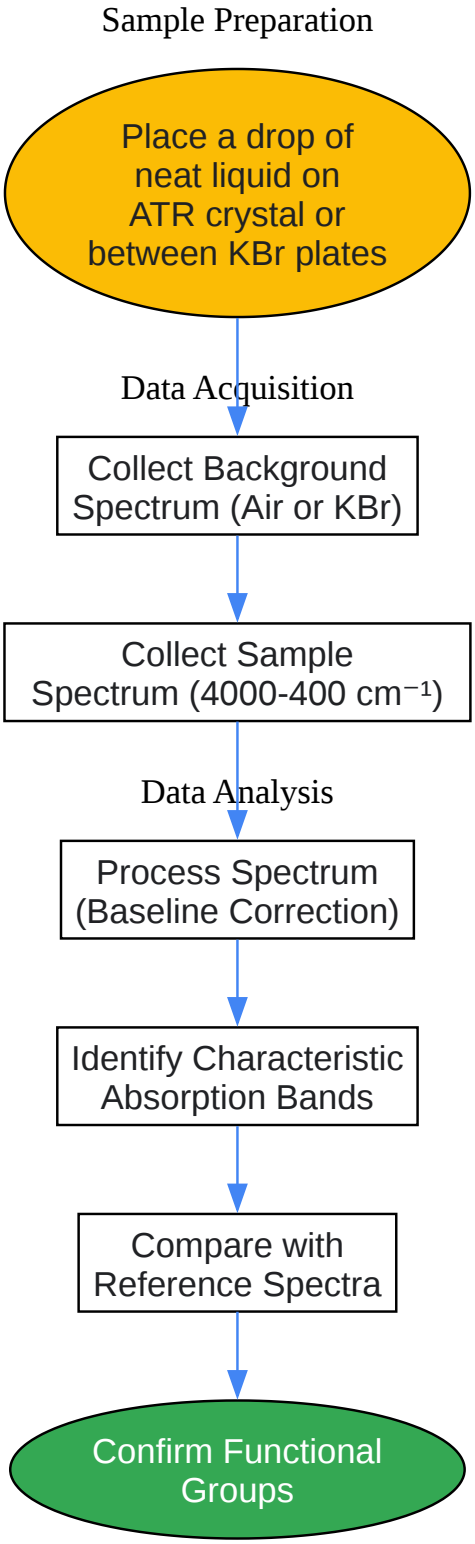

Click to download full resolution via product page

FTIR Spectroscopy Workflow for **2-Propylaniline**.

© 2026 BenchChem. All rights reserved.

Need Custom Synthesis?

BenchChem offers custom synthesis for rare earth carbides and specific isotopiclabeling.

Email: info@benchchem.com or Request Quote Online.

References

- 1. 2-Propylaniline | C9H13N | CID 15759 - PubChem [pubchem.ncbi.nlm.nih.gov]
- 2. 2-Propylaniline(1821-39-2) 1H NMR spectrum [chemicalbook.com]
- To cite this document: BenchChem. [Application Notes and Protocols for the Analytical Characterization of 2-Propylaniline]. BenchChem, [2026]. [Online PDF]. Available at: [https://www.benchchem.com/product/b158001/docs#application-notes-and-protocols-for-the-analytical-characterization-of-2-propylaniline]

Disclaimer & Data Validity:

The information provided in this document is for Research Use Only (RUO) and is strictly not intended for diagnostic or therapeutic procedures. While BenchChem strives to provide accurate protocols, we make no warranties, express or implied, regarding the fitness of this product for every specific experimental setup.

Technical Support: The protocols provided are for reference purposes. Unsure if this reagent suits your experiment?

Need Industrial/Bulk Grade? Request Custom Synthesis Quote

BenchChem

Our mission is to be the trusted global source of essential and advanced chemicals, empowering scientists and researchers to drive progress in science and industry.

Contact

Address: 3281 E Guasti Rd

Ontario, CA 91761, United States

Phone: (601) 213-4426

Email: info@benchchem.com

Contact our Ph.D. Support Team for a compatibility check

© 2026 BenchChem. All rights reserved.