Technical Support Center: Addressing Variability in L-Serine Uptake Across Cell Lines

Author: BenchChem Technical Support Team. **Date**: May 2026

Compound of Interest

Compound Name: *L-SERINE UNLABELED*

Cat. No.: *B1579713*

Get Quote

Welcome to the technical support center for researchers, scientists, and drug development professionals. This guide is designed to help you navigate the complexities of L-serine uptake assays and troubleshoot the inherent variability observed across different cell lines. As your dedicated scientific resource, this document provides in-depth, experience-driven insights to ensure the accuracy and reproducibility of your experimental results.

Section 1: Frequently Asked Questions (FAQs)

This section addresses the most common questions and concerns regarding L-serine uptake, providing a foundational understanding of the biological principles at play.

Q1: Why do I see such significant differences in L-serine uptake rates when I switch between cell lines?

A1: This is a frequently observed phenomenon rooted in the diverse expression and activity of amino acid transporters on the cell surface. L-serine is not transported by a single, universal mechanism. Instead, multiple transporters with varying affinities and capacities are involved. The predominant transporters for L-serine are from the Alanine-Serine-Cysteine Transporter (ASCT) and L-Type Amino Acid Transporter (LAT) families.[1][2]

© 2026 BenchChem. All rights reserved.

The expression levels of these transporters, such as ASCT1 (SLC1A4) and ASCT2 (SLC1A5), can differ dramatically between cell lines due to their tissue of origin, genetic background, and metabolic state.[3][4][5][6] For example, cancer cells often upregulate specific transporters to meet the high demand for amino acids required for rapid proliferation.[7][8][9][10] Therefore, a cell line derived from a highly proliferative tumor may exhibit significantly higher L-serine uptake than a non-cancerous or slower-growing cell line.

Q2: Can the composition of my cell culture medium affect L-serine uptake rates?

A2: Absolutely. The composition of your culture medium is a critical variable. Standard culture media like DMEM and RPMI-1640 were not designed to mimic the physiological concentrations of metabolites found in the human body.[11] These media often contain an overabundance of certain amino acids, which can competitively inhibit the uptake of L-serine. For instance, high concentrations of alanine can inhibit L-serine transport via ASCT1 and ASCT2.[11]

Furthermore, the presence or absence of other nutrients can indirectly influence transporter expression and activity. Cells cultured in more physiologically relevant media, such as Plasmax™, may alter their gene expression profiles for amino acid transporters to adapt to a different nutrient environment.[11]

Q3: My L-serine uptake results are inconsistent even within the same cell line. What could be the cause?

A3: Inconsistent results within a single cell line often point to experimental variables. Here are a few key factors to consider:

- Cell Confluency: The density of your cell culture can impact nutrient availability and transporter expression. It is crucial to perform uptake assays at a consistent cell confluency.
- Passage Number: As cell lines are passaged, they can undergo phenotypic and genotypic changes, which may alter transporter expression. It is advisable to use cells within a defined passage number range for your experiments.
- Serum Variability: Fetal bovine serum (FBS) is a common supplement in cell culture media, but its composition can vary between lots. This variability in amino acid and growth factor

© 2026 BenchChem. All rights reserved.

concentrations can influence L-serine uptake. Using dialyzed FBS can help to mitigate this issue.[12]

- Assay Conditions: Temperature, pH, and incubation times must be strictly controlled. Amino acid transport is an active process that is sensitive to these parameters.[13]

Q4: How do I know which specific transporter is responsible for L-serine uptake in my cell line?

A4: Identifying the primary transporter(s) in your specific cell line requires a multi-pronged approach:

- Expression Analysis: Use techniques like quantitative PCR (qPCR) or Western blotting to determine the relative expression levels of known L-serine transporters (e.g., ASCT1, ASCT2, LAT1).[4]
- Inhibitor Studies: Employ specific pharmacological inhibitors for different transporter families. By observing the degree to which an inhibitor reduces L-serine uptake, you can infer the contribution of the targeted transporter.
- Gene Silencing: Utilize siRNA or shRNA to knock down the expression of specific transporter genes. A significant reduction in L-serine uptake following the knockdown of a particular transporter provides strong evidence for its involvement.[6]

Section 2: Troubleshooting Guide

This section provides a systematic approach to identifying and resolving common issues encountered during L-serine uptake experiments.

Problem 1: Low or No Detectable L-serine Uptake

Possible Causes & Solutions

© 2026 BenchChem. All rights reserved.

Potential Cause	Troubleshooting Steps
Incorrect Assay Wavelength	For colorimetric or fluorometric assays, ensure that you are using the correct excitation and emission wavelengths as specified by the manufacturer's protocol. For the Bradford assay, for example, absorbance should be measured at 595 nm.[14]
Inactive or Degraded Reagents	Check the expiration dates of all reagents, including radiolabeled L-serine and assay kits. Store all components at the recommended temperatures. If in doubt, use a fresh batch of reagents.[14]
Low Transporter Expression	Your cell line may naturally have very low expression of L-serine transporters. Confirm transporter expression levels via qPCR or Western blot. If expression is low, consider using a different cell line known to have higher transporter activity.
Presence of Inhibitory Substances	Your cell culture medium or assay buffer may contain competitive inhibitors. Wash cells thoroughly with a buffered saline solution (e.g., PBS or HBSS) before starting the uptake assay to remove any residual media components.[12][13]
Sub-optimal Assay Temperature	Amino acid transport is temperature-dependent. Ensure that all solutions and the cells are pre-warmed to 37°C before and during the uptake period.[13]

Problem 2: High Background Signal

Possible Causes & Solutions

© 2026 BenchChem. All rights reserved.

Potential Cause	Troubleshooting Steps
Insufficient Washing	Inadequate washing of cells after the uptake incubation can leave behind extracellular L-serine, leading to a high background. Increase the number and volume of washes with ice-cold PBS.[12]
Non-specific Binding	The labeled L-serine may be binding non-specifically to the cell surface or the culture plate. Include a control where a high concentration of unlabeled L-serine is added along with the labeled substrate to determine the level of non-specific binding.
Contaminated Reagents or Equipment	Use fresh, sterile pipette tips and microcentrifuge tubes for each step. Ensure that your buffers and media are not contaminated.
Incorrect Blanking	Your blank should account for the absorbance or fluorescence of the assay medium and any reagents in the absence of cells. Ensure your blank is prepared correctly according to the assay protocol.[14]

Problem 3: Inconsistent or Non-Reproducible Results

Possible Causes & Solutions

© 2026 BenchChem. All rights reserved.

Potential Cause	Troubleshooting Steps
Variable Cell Numbers	Inconsistent cell seeding density will lead to variability in uptake measurements. Use a cell counter to ensure that the same number of cells is seeded for each experiment. Perform a protein quantification assay (e.g., Bradford or BCA assay) on cell lysates from parallel wells to normalize the uptake data to the total protein content.[14]
Inconsistent Incubation Times	The timing of the uptake and wash steps is critical. Use a multichannel pipette and a precise timer to ensure that all wells are treated for the same duration.
Edge Effects in Multi-well Plates	The outer wells of a multi-well plate are more prone to evaporation, which can concentrate solutes and affect cell health. Avoid using the outermost wells for your experimental samples.
Pipetting Errors	Inaccurate pipetting can introduce significant variability. Ensure your pipettes are properly calibrated and use consistent technique.

Section 3: Key Experimental Protocols

This section provides detailed, step-by-step methodologies for core experiments related to L-serine uptake.

Protocol 1: Radiolabeled L-Serine Uptake Assay

This protocol outlines the use of a radiolabeled substrate to directly measure L-serine transport into adherent cells.

Materials:

- Adherent cell line of interest

© 2026 BenchChem. All rights reserved.

- Complete culture medium
- Dialyzed fetal bovine serum (dFBS)
- L-[3H]-serine or L-[14C]-serine
- Hanks' Balanced Salt Solution (HBSS) or Phosphate-Buffered Saline (PBS)
- Unlabeled L-serine
- Cell lysis buffer (e.g., 0.1 M NaOH with 1% SDS)
- Scintillation cocktail
- Scintillation counter

Procedure:

- Cell Seeding: Seed cells in a 24-well plate at a density that will result in 80-90% confluency on the day of the experiment.
- Pre-incubation:
  - Aspirate the culture medium.
  - Wash the cells twice with pre-warmed HBSS.
  - Add 500 µL of pre-warmed HBSS to each well and incubate at 37°C for 15 minutes to deplete intracellular amino acid pools.
- Uptake Initiation:
  - Prepare the uptake solution by adding radiolabeled L-serine to pre-warmed HBSS at the desired final concentration.
  - For non-specific uptake control wells, add a high concentration of unlabeled L-serine (e.g., 10 mM) to the uptake solution.
  - Aspirate the pre-incubation buffer and add 250 µL of the uptake solution to each well.

© 2026 BenchChem. All rights reserved.

- Incubate at 37°C for the desired time (e.g., 1-5 minutes).

- Uptake Termination and Washing:
  - Aspirate the uptake solution.
  - Quickly wash the cells three times with 1 mL of ice-cold HBSS to remove extracellular radiolabel.
- Cell Lysis and Quantification:
  - Add 250 µL of cell lysis buffer to each well and incubate at room temperature for 30 minutes with gentle shaking.
  - Transfer the lysate to a scintillation vial.
  - Add 4 mL of scintillation cocktail to each vial.
  - Measure the radioactivity in a scintillation counter.
- Data Analysis:
  - Subtract the counts per minute (CPM) from the non-specific uptake wells from the experimental wells to determine specific uptake.
  - Normalize the specific uptake to the total protein concentration in parallel wells.

Protocol 2: Transporter Expression Analysis by qPCR

This protocol details the measurement of mRNA levels for key L-serine transporters.

Materials:

- Cultured cells
- RNA extraction kit
- cDNA synthesis kit

© 2026 BenchChem. All rights reserved.

- qPCR master mix
- Primers for target transporters (e.g., SLC1A4, SLC1A5) and a housekeeping gene (e.g., GAPDH, ACTB)
- qPCR instrument

Procedure:

- RNA Extraction: Extract total RNA from your cell lines of interest using a commercial RNA extraction kit, following the manufacturer's instructions.
- cDNA Synthesis: Synthesize cDNA from the extracted RNA using a reverse transcription kit.
- qPCR Reaction Setup:
  - Prepare a qPCR master mix containing SYBR Green or a probe-based detection system.
  - Add the appropriate forward and reverse primers for your target genes and the housekeeping gene.
  - Add the cDNA template to the reaction mix.
- qPCR Run: Perform the qPCR reaction using a standard thermal cycling protocol.
- Data Analysis:
  - Determine the cycle threshold (Ct) values for each gene.
  - Calculate the relative expression of the target transporter genes using the ΔΔCt method, normalizing to the housekeeping gene.

Section 4: Visualizing L-Serine Transport and Troubleshooting

Diagram 1: Major L-Serine Uptake Pathways

© 2026 BenchChem. All rights reserved.

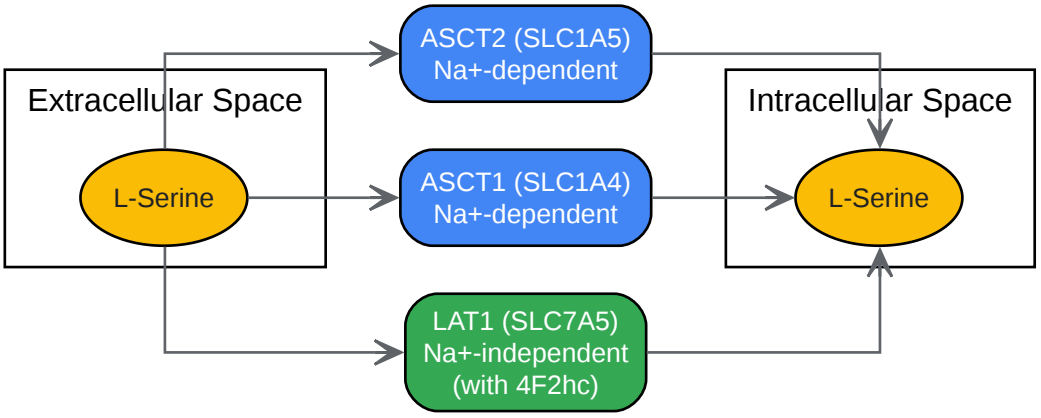

Click to download full resolution via product page

Caption: Key transporters involved in L-serine uptake at the plasma membrane.

Diagram 2: Troubleshooting Workflow for L-Serine Uptake Assays

© 2026 BenchChem. All rights reserved.

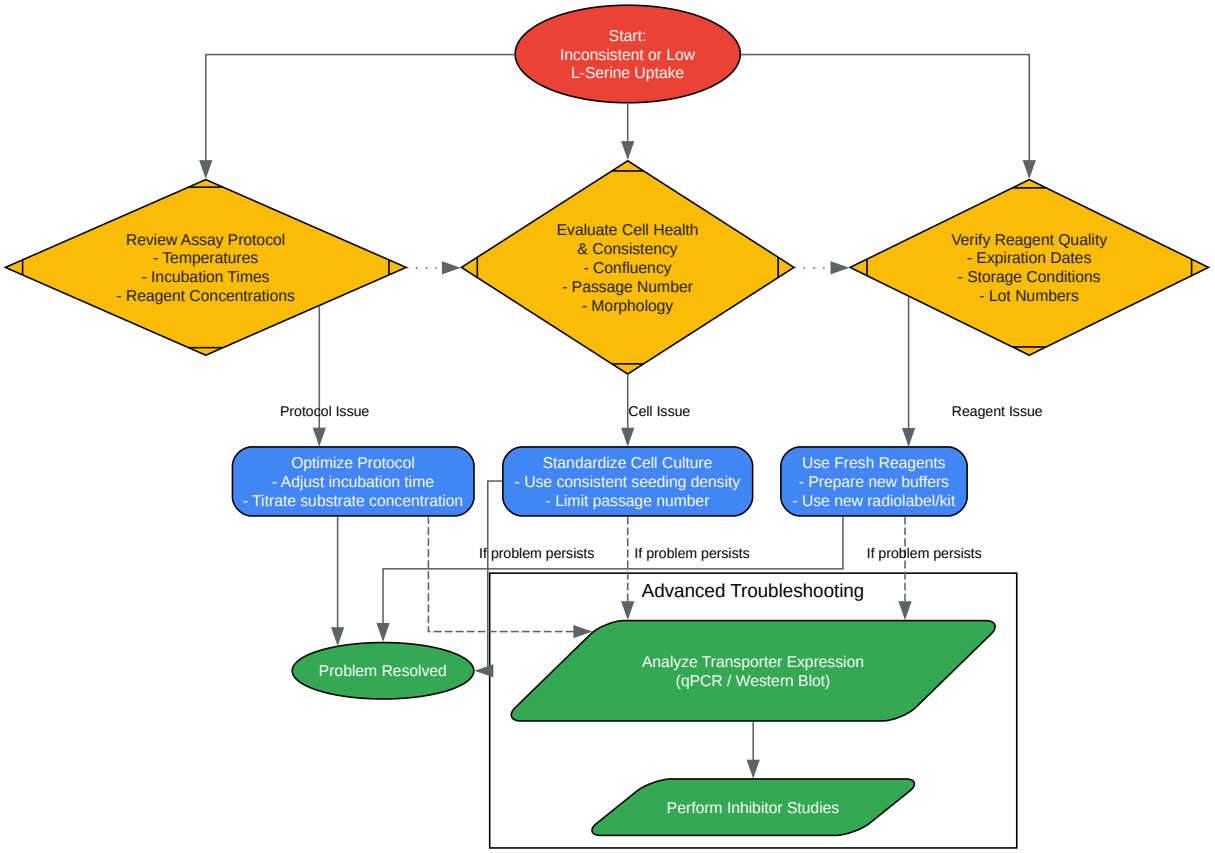

Click to download full resolution via product page

Caption: A logical workflow for troubleshooting common L-serine uptake assay issues.

References

© 2026 BenchChem. All rights reserved.

- Salisbury, T. B., & Arthur, S. (2018). The Regulation and Function of the L-Type Amino Acid Transporter 1 (LAT1) in Cancer. International Journal of Molecular Sciences, 19(8), 2373. [Link]
- Hayashi, K., & Anzai, N. (2018). The Regulation and Function of the L-Type Amino Acid Transporter 1 (LAT1) in Cancer - PMC. National Center for Biotechnology Information. [Link]
- Wang, X., et al. (2023). Targeting emerging amino acid dependencies and transporters in cancer therapy. Frontiers in Oncology. [Link]
- Foster, A. C., et al. (2016). D-Serine Is a Substrate for Neutral Amino Acid Transporters ASCT1/SLC1A4 and ASCT2/SLC1A5, and Is Transported by Both Subtypes in Rat Hippocampal Astrocyte Cultures. PLOS One. [Link]
- Salisbury, T. B., & Arthur, S. (2018). The Regulation and Function of the L-Type Amino Acid Transporter 1 (LAT1) in Cancer. MDPI. [Link]
- Garaeva, A. A., et al. (2022). Functional and Kinetic Comparison of Alanine Cysteine Serine Transporters ASCT1 and ASCT2. International Journal of Molecular Sciences. [Link]
- Sason, H., et al. (2018). ASCT1 (Slc1a4) transporter is a physiologic regulator of brain d-serine and neurodevelopment. Proceedings of the National Academy of Sciences. [Link]
- Yamamoto, T., et al. (2004). Functional identification of ASCT1 neutral amino acid transporter as the predominant system for the uptake of L-serine in rat neurons in primary culture. Journal of Neurochemistry. [Link]
- Salisbury, T. B., & Arthur, S. (2018). The cancer-specific regulation and function of L-Type Amino Acid Transporter 1 (LAT1). ResearchGate. [Link]
- Kumar, A., et al. (2023). L-serine: Neurological Implications and Therapeutic Potential. International Journal of Molecular Sciences. [Link]
- Tajan, M., et al. (2021). The impact of physiological metabolite levels on serine uptake, synthesis and utilization in cancer cells. Nature Communications. [Link]

© 2026 BenchChem. All rights reserved.

- Tsuboi, T., et al. (2022). Sources and Sinks of Serine in Nutrition, Health, and Disease. Current Developments in Nutrition. [Link]
- Garaeva, A. A., et al. (2022). Functional and Kinetic Comparison of Alanine Cysteine Serine Transporters ASCT1 and ASCT2. MDPI. [Link]
- Scalise, M., et al. (2018). The Human SLC1A5 (ASCT2) Amino Acid Transporter: From Function to Structure and Role in Cell Biology. Frontiers in Cell and Developmental Biology. [Link]
- White, M. A., et al. (2018). Regulation of SLC1A4 and SLC1A5 in Prostate Cancer—Response. Molecular Cancer Research. [Link]
- Wolosker, H., et al. (2014). Cell-type specific mechanisms of D-serine uptake and release in the brain. Frontiers in Synaptic Neuroscience. [Link]
- Shishmarev, D., et al. (2023). A study on L-threonine and L-serine uptake in Escherichia coli K-12. Frontiers in Microbiology. [Link]
- Singh, N., & Ecker, G. F. (2019). Reevaluating the Substrate Specificity of the L-Type Amino Acid Transporter (LAT1). Journal of Medicinal Chemistry. [Link]
- Solvo Biotechnology. (n.d.). LAT1. Solvo Biotechnology. [Link]
- White, M. A., et al. (2017). SLC1A4 and SLC1A5 are required for maximal androgen-mediated prostate cancer cell growth. ResearchGate. [Link]
- Singh, N., & Ecker, G. F. (2018). Insights into the Structure, Function, and Ligand Discovery of the Large Neutral Amino Acid Transporter 1, LAT1. MDPI. [Link]
- Shishmarev, D., et al. (2023). A study on L-threonine and L-serine uptake in Escherichia coli K-12 - PMC. National Center for Biotechnology Information. [Link]
- Scalise, M., et al. (2018). The Human SLC1A5 (ASCT2) Amino Acid Transporter: From Function to Structure and Role in Cell Biology. ResearchGate. [Link]

© 2026 BenchChem. All rights reserved.

- National Center for Biotechnology Information. (2026). SLC1A5 solute carrier family 1 member 5 [(human)]. NCBI. [Link]
- Dojindo Molecular Technologies. (n.d.). Amino Acid Uptake Assay Kit UP04 manual. Dojindo. [Link]
- Fotiadis, D., et al. (2013). L-Type amino acid transporter 1 as a target for drug delivery. Expert Opinion on Therapeutic Targets. [Link]
- Li, Y., et al. (2025). The role and research progress of serine metabolism in tumor cells. Frontiers in Oncology. [Link]
- Furuya, M., et al. (2009). Role of the L- amino acid transporter-1 (LAT-1) in Mouse Trophoblast Cell Invasion. BMC Developmental Biology. [Link]
- Immusmol. (2021). L-Serine quantification by ELISA? It's now possible! Immusmol. [Link]
- T-Y, D., et al. (2023). Phenotypic profiling of solute carriers characterizes serine transport in cancer. Nature Communications. [Link]
- ZAGENO. (2025). Bradford Assay Troubleshooting Guide Common Errors and Fixes. ZAGENO. [Link]
- Lee, J. Y., et al. (2017). The alteration of serine transporter activity in a cell line model of amyotrophic lateral sclerosis (ALS). Biochemical and Biophysical Research Communications. [Link]
- METBIONET. (n.d.). METBIONET GUIDELINES FOR AMINO ACID ANALYSIS. METBIONET. [Link]
- Biochrom. (2026). Amino Acid Analysis FAQs. Biochrom. [Link]
- Zhang, Y., et al. (2025). A rapid and simple non-radioactive assay for measuring uptake by solute carrier transporters. ResearchGate. [Link]
- Hama, H., et al. (1990). Characterization of a novel L-serine transport system in Escherichia coli. Journal of Bacteriology. [Link]

© 2026 BenchChem. All rights reserved.

- Hama, H., et al. (1990). Characterization of a novel L-serine transport system in Escherichia coli. PubMed. [Link]

Need Custom Synthesis?

BenchChem offers custom synthesis for rare earth carbides and specific isotopiclabeling.

Email: info@benchchem.com or Request Quote Online.

Sources

- 1. D-Serine Is a Substrate for Neutral Amino Acid Transporters ASCT1/SLC1A4 and ASCT2/SLC1A5, and Is Transported by Both Subtypes in Rat Hippocampal Astrocyte Cultures | PLOS One [journals.plos.org]
- 2. Frontiers | Cell-type specific mechanisms of D-serine uptake and release in the brain [frontiersin.org]
- 3. pnas.org [pnas.org]
- 4. Functional identification of ASCT1 neutral amino acid transporter as the predominant system for the uptake of L-serine in rat neurons in primary culture - PubMed [pubmed.ncbi.nlm.nih.gov]
- 5. The Human SLC1A5 (ASCT2) Amino Acid Transporter: From Function to Structure and Role in Cell Biology - PMC [pmc.ncbi.nlm.nih.gov]
- 6. The alteration of serine transporter activity in a cell line model of amyotrophic lateral sclerosis (ALS) - PubMed [pubmed.ncbi.nlm.nih.gov]
- 7. The Regulation and Function of the L-Type Amino Acid Transporter 1 (LAT1) in Cancer - PubMed [pubmed.ncbi.nlm.nih.gov]
- 8. The Regulation and Function of the L-Type Amino Acid Transporter 1 (LAT1) in Cancer - PMC [pmc.ncbi.nlm.nih.gov]
- 9. semanticscholar.org [semanticscholar.org]
- 10. researchgate.net [researchgate.net]
- 11. The impact of physiological metabolite levels on serine uptake, synthesis and utilization in cancer cells - PMC [pmc.ncbi.nlm.nih.gov]
- 12. pdf.benchchem.com [pdf.benchchem.com]
- 13. Amino Acid Uptake Assay Kit UP04 manual | DOJINDO [dojindo.com]

© 2026 BenchChem. All rights reserved.

- 14. go.zageno.com [go.zageno.com]
- To cite this document: BenchChem. [Technical Support Center: Addressing Variability in L-Serine Uptake Across Cell Lines]. BenchChem, [2026]. [Online PDF]. Available at: [https://www.benchchem.com/product/b1579713/docs#technical-support-center-addressing-variability-in-l-serine-uptake-across-cell-lines]

Disclaimer & Data Validity:

The information provided in this document is for Research Use Only (RUO) and is strictly not intended for diagnostic or therapeutic procedures. While BenchChem strives to provide accurate protocols, we make no warranties, express or implied, regarding the fitness of this product for every specific experimental setup.

Technical Support: The protocols provided are for reference purposes. Unsure if this reagent suits your experiment?

Need Industrial/Bulk Grade? Request Custom Synthesis Quote

BenchChem

Our mission is to be the trusted global source of essential and advanced chemicals, empowering scientists and researchers to drive progress in science and industry.

Contact

Address: 3281 E Guasti Rd

Ontario, CA 91761, United States

Phone: (601) 213-4426

Email: info@benchchem.com

Contact our Ph.D. Support Team for a compatibility check