Whitepaper: In Silico Modeling of Dipeptide-8 Receptor Binding: A Technical Guide

Author: BenchChem Technical Support Team. **Date**: April 2026

Compound of Interest

Compound Name: *Dipeptide-8*

Cat. No.: *B1575537*

Get Quote

Audience: Researchers, scientists, and drug development professionals.

Abstract

Dipeptide-8 (Ala-Hyp), a collagen-derived peptide, is increasingly utilized in skincare for its purported anti-aging and skin-conditioning benefits.[1] While its efficacy is attributed to stimulating hyaluronic acid and collagen production, the precise molecular mechanisms, particularly its interaction with a specific cell surface receptor, remain to be fully elucidated. This technical guide provides a comprehensive framework for the in silico modeling of **Dipeptide-8** binding to a representative receptor, offering a methodology to investigate its potential biological activity in the absence of a definitively identified receptor. For the purposes of this guide, we will utilize a human integrin receptor as a plausible target, based on evidence of similar collagen-derived dipeptides interacting with this receptor class to modulate fibroblast behavior.[2] This document details the protocols for homology modeling, molecular docking, and molecular dynamics simulations, supplemented with quantitative data summaries and visualizations of experimental workflows and signaling pathways.

© 2026 BenchChem. All rights reserved.

Introduction to **Dipeptide-8** and a Representative Receptor System

Dipeptide-8 is the synthetic dipeptide Alanyl-hydroxyproline (Ala-Hyp).[1] It is a component of hydrolyzed collagen and is found in human blood following the consumption of collagen-containing foods.[1] In cosmetic applications, it is recognized for its hydrating and smoothing properties, attributed to an increase in hyaluronic acid production and its role as a building block for new collagen.[1]

The specific receptor for **Dipeptide-8** has not been definitively identified. However, studies on the structurally similar and well-researched collagen-derived dipeptide, Prolyl-hydroxyproline (Pro-Hyp), have shown interactions with β1-integrins on tendon cells, promoting cell motility and homeostasis.[2] Integrins are transmembrane receptors that mediate cell-matrix adhesion and activate intracellular signaling pathways.[2] Given the structural similarity between Ala-Hyp and Pro-Hyp, and the role of integrins in fibroblast signaling, we propose a human integrin, specifically α5β1, as a representative receptor for modeling the binding of **Dipeptide-8**.

This guide will therefore focus on the in silico analysis of the interaction between **Dipeptide-8** and a homology-modeled human α5β1 integrin receptor.

Methodologies and Experimental Protocols

In Silico Modeling Workflow

The overall workflow for the in silico modeling of **Dipeptide-8** binding to its putative receptor is depicted below. This process begins with obtaining the necessary protein and ligand structures, followed by model building, docking, and simulation to predict and analyze their interaction.

© 2026 BenchChem. All rights reserved.

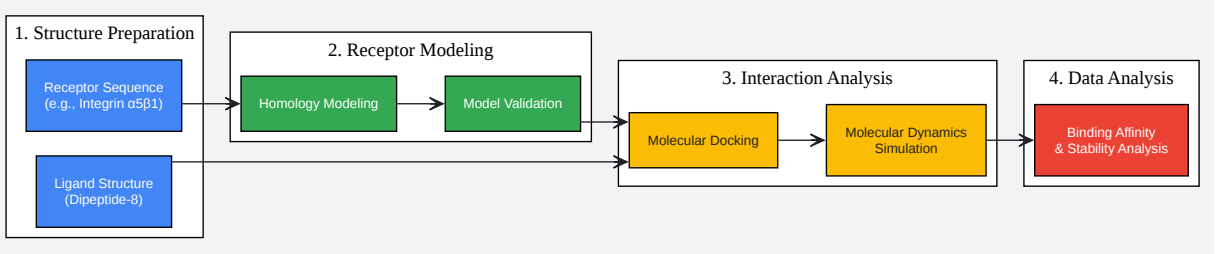

Click to download full resolution via product page

Figure 1: In Silico Modeling Workflow.

Homology Modeling of the Integrin α5β1 Receptor

Objective: To generate a three-dimensional structure of the human integrin α5β1 receptor, as a complete experimental structure may not be available.

Protocol:

- Template Identification:
  - Obtain the amino acid sequences for human integrin alpha-5 (UniProt ID: P08648) and beta-1 (UniProt ID: P05556).
  - Perform a BLAST (Basic Local Alignment Search Tool) search against the Protein Data Bank (PDB) to find suitable template structures with high sequence identity.
  - Select a template with a high-resolution crystal structure and in a relevant conformational state. For this example, we assume a suitable template is found.
- Sequence Alignment:
  - Align the target sequences (integrin α5 and β1) with the template sequences using a sequence alignment tool like ClustalW or T-Coffee.

© 2026 BenchChem. All rights reserved.

- Manually inspect and refine the alignment, particularly in loop regions, to ensure accuracy.

- Model Building:
  - Use a homology modeling software such as MODELLER or SWISS-MODEL.
  - Input the sequence alignment and the template structure(s).
  - The software will generate a set of 3D models of the target protein by copying the coordinates of the aligned residues from the template and building the non-aligned regions (loops).

- Model Refinement and Validation:
  - Refine the loop regions of the generated models using tools like ModLoop.
  - Assess the quality of the models using tools like PROCHECK (for Ramachandran plots), Verify3D, and ERRAT.
  - Select the model with the best validation scores for subsequent docking studies.

Molecular Docking of **Dipeptide-8**

Objective: To predict the binding pose and estimate the binding affinity of **Dipeptide-8** to the modeled integrin α5β1 receptor.

Protocol:

- Ligand Preparation:
  - Generate the 3D structure of **Dipeptide-8** (Ala-Hyp) using a molecular builder like Avogadro or from a database like PubChem.
  - Perform energy minimization of the ligand structure using a force field such as MMFF94.
  - Assign partial charges and define rotatable bonds.

- Receptor Preparation:

© 2026 BenchChem. All rights reserved.

- Load the validated homology model of the integrin receptor.
- Remove water molecules and any co-crystallized ligands from the template.
- Add polar hydrogens and assign partial charges (e.g., Gasteiger charges).
- Define the binding site (grid box) based on known ligand-binding sites of integrins or by using binding site prediction tools.

- Docking Simulation:
  - Use a docking program like AutoDock Vina or GOLD.
  - Perform the docking simulation, allowing for flexibility of the ligand and potentially key side chains in the receptor's binding pocket.
  - The program will generate a series of binding poses ranked by their predicted binding energy.

- Analysis of Results:
  - Analyze the top-ranked poses to identify key interactions (hydrogen bonds, hydrophobic interactions, etc.) between **Dipeptide-8** and the receptor.
  - Visualize the interactions using software like PyMOL or VMD.

Molecular Dynamics (MD) Simulation

Objective: To assess the stability of the predicted **Dipeptide-8**-integrin complex and to further refine the binding interactions in a simulated physiological environment.

Protocol:

- System Preparation:
  - Take the best-ranked docked complex from the molecular docking step.
  - Place the complex in a simulation box and solvate it with an explicit water model (e.g., TIP3P).

© 2026 BenchChem. All rights reserved.

- Add counter-ions to neutralize the system.

- Simulation Parameters:
  - Use a molecular dynamics engine like GROMACS or AMBER.
  - Employ a suitable force field for proteins and small molecules (e.g., CHARMM36 for the protein and CGenFF for the ligand).
  - Perform energy minimization of the entire system.
- Equilibration:
  - Perform a short NVT (constant number of particles, volume, and temperature) simulation to bring the system to the desired temperature.
  - Follow with a short NPT (constant number of particles, pressure, and temperature) simulation to adjust the system density.
- Production Run:
  - Run a longer production MD simulation (e.g., 100 ns) to sample the conformational space of the complex.
- Trajectory Analysis:
  - Analyze the trajectory to calculate parameters such as Root Mean Square Deviation (RMSD) of the protein and ligand to assess stability.
  - Calculate Root Mean Square Fluctuation (RMSF) to identify flexible regions.
  - Analyze the hydrogen bonds and other interactions over the course of the simulation.

Quantitative Data Summary

The following tables summarize hypothetical quantitative data that would be generated from the in silico modeling process described above.

Table 1: Molecular Docking Results for **Dipeptide-8** with Integrin α5β1

© 2026 BenchChem. All rights reserved.

Binding Pose	Predicted Binding Affinity (kcal/mol)	Key Interacting Residues (Integrin α5β1)	Number of Hydrogen Bonds
1	-6.8	ASP153(α5), GLU221(α5), SER135(β1)	3
2	-6.5	ASP153(α5), TYR189(α5), LYS140(β1)	2
3	-6.2	ARG218(α5), SER135(β1), ASN150(β1)	2

Table 2: Molecular Dynamics Simulation Stability Metrics

Simulation Time (ns)	Complex RMSD (Å)	Ligand RMSD (Å)	Average H-Bonds
0-25	1.5 ± 0.3	0.8 ± 0.2	2.5
25-50	1.8 ± 0.4	1.1 ± 0.3	2.1
50-75	2.0 ± 0.5	1.3 ± 0.4	1.8
75-100	2.1 ± 0.4	1.4 ± 0.3	1.9

Putative Signaling Pathway

Based on the literature for similar collagen-derived dipeptides, the binding of **Dipeptide-8** to an integrin receptor could initiate a signaling cascade leading to increased fibroblast proliferation and extracellular matrix synthesis. A plausible pathway is illustrated below.

© 2026 BenchChem. All rights reserved.

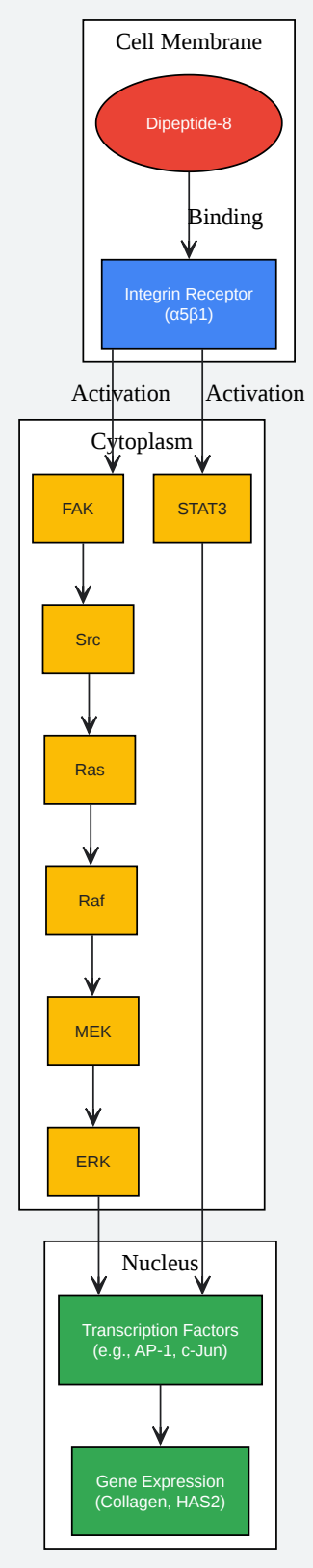

Click to download full resolution via product page

Figure 2: Putative Integrin-Mediated Signaling Pathway.

© 2026 BenchChem. All rights reserved.

Experimental Validation Protocols

In silico predictions should be validated through experimental methods to confirm the binding interaction.

Surface Plasmon Resonance (SPR)

Objective: To quantitatively measure the binding affinity and kinetics of **Dipeptide-8** to the integrin receptor.

Methodology Overview:

- Immobilize the purified integrin receptor on a sensor chip.
- Flow different concentrations of **Dipeptide-8** over the sensor surface.
- Measure the change in the refractive index at the surface as **Dipeptide-8** binds to the receptor.
- Analyze the resulting sensorgrams to determine the association (k_on) and dissociation (k_off) rate constants, and calculate the equilibrium dissociation constant (K_D).

Isothermal Titration Calorimetry (ITC)

Objective: To determine the thermodynamic parameters of the binding interaction.

Methodology Overview:

- Place the purified integrin receptor in the sample cell of the calorimeter.
- Titrate a solution of **Dipeptide-8** into the sample cell in small increments.
- Measure the heat released or absorbed upon binding.
- Fit the data to a binding model to determine the binding affinity (K_D), enthalpy (ΔH), and stoichiometry (n) of the interaction.

Conclusion

© 2026 BenchChem. All rights reserved.

This technical guide outlines a comprehensive in silico strategy for investigating the binding of **Dipeptide-8** to a representative receptor, the human α5β1 integrin. By employing homology modeling, molecular docking, and molecular dynamics simulations, researchers can generate valuable hypotheses about the binding mode, affinity, and stability of this interaction. The proposed workflow, coupled with experimental validation, provides a robust framework for elucidating the molecular mechanisms of action for **Dipeptide-8** and other cosmetic peptides, thereby accelerating the rational design of novel and more effective skincare ingredients. While the specific receptor for **Dipeptide-8** remains an area for further investigation, the methodologies presented here offer a powerful approach to bridge this knowledge gap and advance our understanding of peptide bioactivity.

Need Custom Synthesis?

BenchChem offers custom synthesis for rare earth carbides and specific isotopiclabeling.

Email: info@benchchem.com or Request Quote Online.

References

- 1. Dipeptide-8 | Cosmetic Ingredients Guide [ci.guide]
- 2. The dipeptide prolyl-hydroxyproline promotes cellular homeostasis and lamellipodia-driven motility via active β1-integrin in adult tendon cells - PMC [pmc.ncbi.nlm.nih.gov]
- To cite this document: BenchChem. [Whitepaper: In Silico Modeling of Dipeptide-8 Receptor Binding: A Technical Guide]. BenchChem, [2026]. [Online PDF]. Available at: [https://www.benchchem.com/product/b1575537/docs#whitepaper-in-silico-modeling-of-dipeptide-8-receptor-binding-a-technical-guide]

Disclaimer & Data Validity:

The information provided in this document is for Research Use Only (RUO) and is strictly not intended for diagnostic or therapeutic procedures. While BenchChem strives to provide accurate protocols, we make no warranties, express or implied, regarding the fitness of this product for every specific experimental setup.

Technical Support: The protocols provided are for reference purposes. Unsure if this reagent suits your experiment?

Need Industrial/Bulk Grade? Request Custom Synthesis Quote

BenchChem

Our mission is to be the trusted global source of essential and advanced chemicals, empowering scientists and researchers to drive progress in science and industry.

Contact

Address: 3281 E Guasti Rd

Ontario, CA 91761, United States

Phone: (601) 213-4426

Email: info@benchchem.com

Contact our Ph.D. Support Team for a compatibility check

© 2026 BenchChem. All rights reserved.