AAV-8 Capsid Epitope Immunogenicity Across Diverse HLA Backgrounds: A Comparative Guide

Author: BenchChem Technical Support Team. **Date**: April 2026

Compound of Interest

Compound Name: *AAV-8 NSL epitope*

Cat. No.: *B15624170*

Get Quote

For Researchers, Scientists, and Drug Development Professionals

This guide provides a comparative analysis of the T-cell immune response to adeno-associated virus serotype 8 (AAV-8) capsid epitopes, with a focus on how this response varies across different Human Leukocyte Antigen (HLA) backgrounds. Understanding the interplay between AAV-8 epitopes and the host HLA repertoire is critical for the development of safe and effective gene therapies. Pre-existing T-cell immunity against AAV capsids can lead to the elimination of transduced cells, thereby limiting therapeutic efficacy. This document summarizes key experimental findings on the HLA-restriction of AAV-8 and homologous AAV9 capsid epitopes, details the methodologies used to generate this data, and visualizes the underlying biological processes.

Comparative T-Cell Response to AAV-8 and Homologous AAV9 Capsid Epitopes in Various HLA Backgrounds

© 2026 BenchChem. All rights reserved.

The following tables summarize identified CD8+ T-cell epitopes from AAV-8 and the highly homologous AAV-9 capsid, their corresponding HLA restrictions, and quantitative T-cell responses where available. Direct comparative data for a single epitope across a wide range of HLA alleles is limited in the literature. Therefore, this guide presents a compilation of data from multiple studies to provide a representative overview.

Table 1: Identified AAV-8 and Homologous AAV-9 CD8+ T-Cell Epitopes and their HLA-A Restrictions

Epitope Sequence	AAV Serotype	HLA Restriction	T-Cell Response Metric	Result	Reference
LIDQYLYYL	AAV-9	HLA-A*02:01*	IFN-γ FluoroSpot	Positive response in HLA-A02:01+ donors	[1]
NSLANPGIA	AAV-8	H-2 Dd (Mouse)	IFN-γ ELISpot	Strong IFN-γ response in mice	[2]
VPQYGYLTL	AAV-2 (Conserved)	HLA-B*07:02	IFN-γ ELISpot	Robust response detected	[3]

Table 2: Identified AAV-8 and Homologous AAV-9 CD8+ T-Cell Epitopes and their HLA-B Restrictions

© 2026 BenchChem. All rights reserved.

Epitope Sequence	AAV Serotype	HLA Restriction	T-Cell Response Metric	Result	Reference
SQAVGRSSF	AAV-9	HLA-B*15:01*	Predicted Binder	High predicted binding affinity	[4]
IPQYGYLTL	AAV-1/6/8	HLA-B07:02	TCR Multimer Staining	Positive staining of CD8+ T-cells	[5]

Note on "NSL" Epitope: The specific AAV-8 epitope "NSLANPGIA" has been identified as a potent CD8+ T-cell epitope in mice with the H-2 Dd MHC haplotype[2]. While this provides evidence of its immunogenicity, direct quantitative data on its response across different human HLA backgrounds is not currently available in the published literature. Researchers should consider this epitope in preclinical murine studies but be aware that its immunodominance may differ in humans.

Experimental Protocols

The characterization of AAV capsid T-cell epitopes and their HLA restriction relies on a combination of advanced immunological and proteomic techniques. Below are detailed methodologies for two key experimental approaches.

MHC-Associated Peptide Proteomics (MAPPs) for Epitope Discovery

This method identifies peptides naturally processed and presented by HLA molecules on the surface of antigen-presenting cells (APCs).

Methodology:

- Cell Culture and Transfection: Monocyte-derived dendritic cells (MDDCs) are generated from peripheral blood mononuclear cells (PBMCs) from healthy donors with diverse HLA types.

© 2026 BenchChem. All rights reserved.

These MDDCs are then transfected with mRNA encoding the AAV capsid protein (e.g., VP1) [4][5][6].

- Cell Lysis and HLA-Peptide Complex Immunoprecipitation: After a period of incubation to allow for protein expression, processing, and presentation, the MDDCs are lysed. HLA class I-peptide complexes are then isolated from the cell lysate using immunoprecipitation with antibodies specific for HLA-A, -B, and -C molecules[4][5][6].

- Peptide Elution and Mass Spectrometry: The bound peptides are eluted from the HLA molecules, typically using a mild acid treatment. The eluted peptide repertoire is then analyzed by liquid chromatography-tandem mass spectrometry (LC-MS/MS) to determine the amino acid sequence of each peptide[4][5][6].

- Data Analysis and HLA Restriction Prediction: The identified peptide sequences are mapped to the AAV capsid protein sequence. Bioinformatic tools are then used to predict the specific HLA allele that is most likely to bind and present each peptide, based on the donor's HLA type and known HLA binding motifs[4][5].

IFN-γ ELISpot Assay for Quantifying T-Cell Responses

The Enzyme-Linked Immunospot (ELISpot) assay is a highly sensitive method used to quantify the frequency of cytokine-secreting T-cells in response to a specific epitope.

Methodology:

- PBMC Isolation: PBMCs are isolated from the blood of donors with known HLA types.

- Cell Stimulation: The PBMCs are stimulated in vitro with specific synthetic peptides corresponding to potential AAV capsid epitopes. A pool of overlapping peptides spanning the entire capsid protein is often used for initial screening[7].

- ELISpot Plate Incubation: The stimulated PBMCs are incubated in a 96-well plate pre-coated with a capture antibody specific for Interferon-gamma (IFN-γ). During incubation, activated T-cells recognizing the peptide-HLA complex on APCs within the PBMC population will secrete IFN-γ.

© 2026 BenchChem. All rights reserved.

- Detection and Visualization: After incubation, the cells are washed away, and a detection antibody conjugated to an enzyme is added. This antibody binds to the captured IFN-γ. A substrate is then added that is converted by the enzyme into a colored precipitate, forming a "spot" at the location of each IFN-γ-secreting cell.

- Quantification: The spots are counted using an automated ELISpot reader. The results are typically expressed as spot-forming units (SFUs) per million PBMCs, providing a quantitative measure of the antigen-specific T-cell response[7].

Visualizations

Signaling Pathway of CD8+ T-Cell Activation

The following diagram illustrates the key signaling events initiated upon the recognition of an AAV capsid epitope presented by an HLA class I molecule on an antigen-presenting cell (APC) by a CD8+ T-cell.

© 2026 BenchChem. All rights reserved.

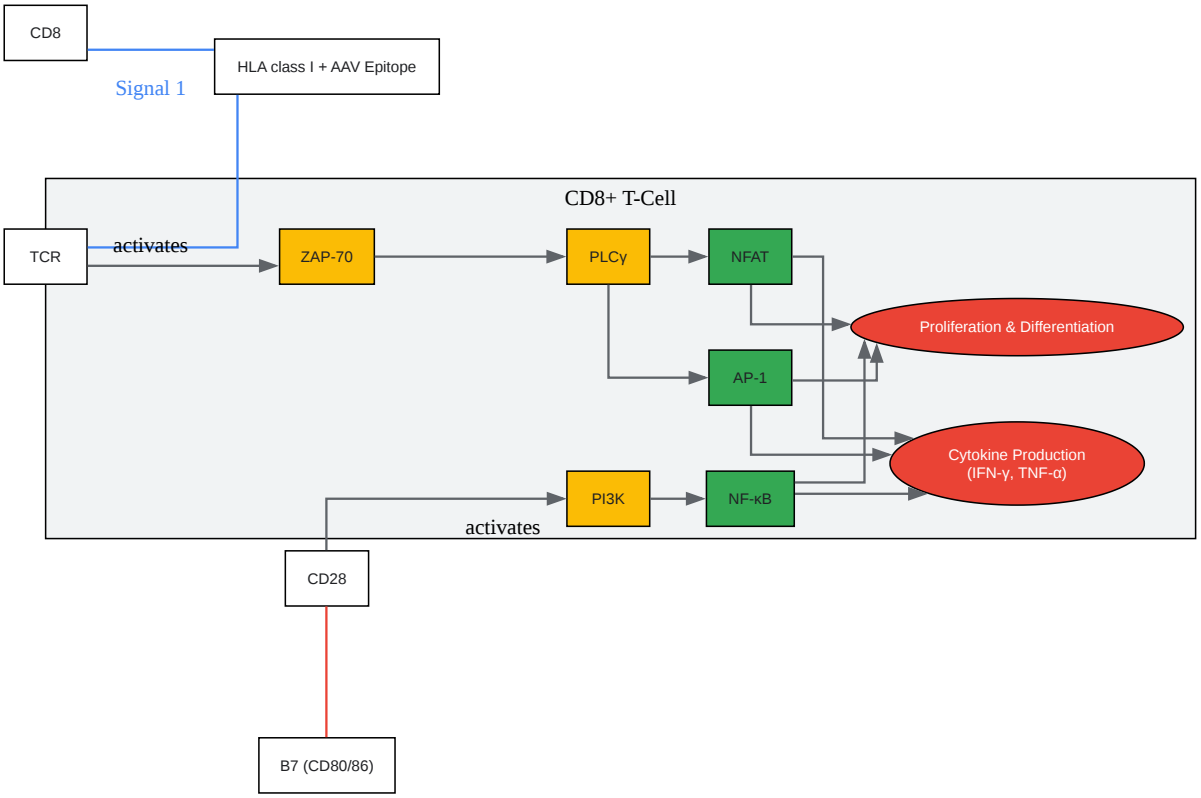

Click to download full resolution via product page

Caption: CD8+ T-cell activation pathway.

Experimental Workflow for AAV Immunogenicity Assessment

This diagram outlines a typical workflow for assessing the cellular immune response to AAV capsid epitopes in a research or clinical setting.

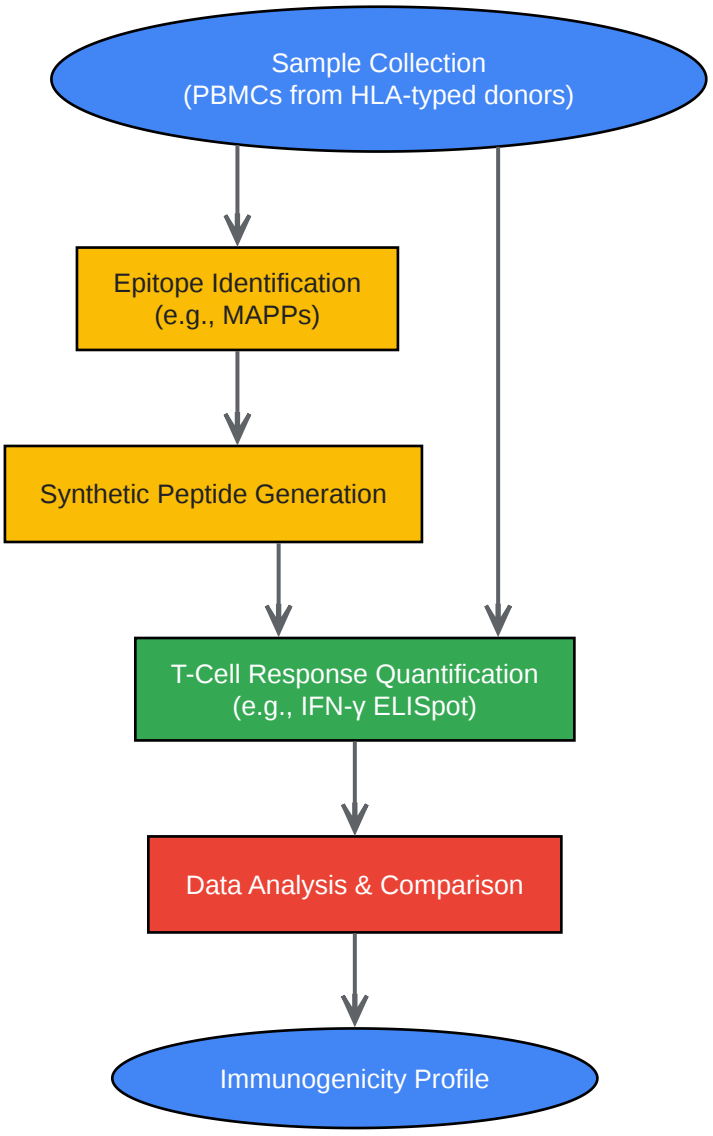

Click to download full resolution via product page

Caption: AAV immunogenicity assessment workflow.

Need Custom Synthesis?

BenchChem offers custom synthesis for rare earth carbides and specific isotopiclabeling.

Email: info@benchchem.com or Request Quote Online.

References

- 1. Frontiers | Epitope mapping using immunopeptidomics reveals novel immunodominant CD8 T cell epitopes of the AAV9 capsid [frontiersin.org]
- 2. Identification of mouse AAV capsid-specific CD8+ T cell epitopes - PubMed [pubmed.ncbi.nlm.nih.gov]
- 3. AAV capsid CD8+ T-cell epitopes are highly conserved across AAV serotypes - PubMed [pubmed.ncbi.nlm.nih.gov]
- 4. Frontiers | The HLA class I immunopeptidomes of AAV capsid proteins [frontiersin.org]
- 5. The HLA class I immunopeptidomes of AAV capsid proteins - PMC [pmc.ncbi.nlm.nih.gov]
- 6. The HLA class I immunopeptidomes of AAV capsid proteins - PubMed [pubmed.ncbi.nlm.nih.gov]
- 7. Capsid-specific T-cell Responses to Natural Infections With Adeno-associated Viruses in Humans Differ From Those of Nonhuman Primates - PMC [pmc.ncbi.nlm.nih.gov]

- To cite this document: BenchChem. [AAV-8 Capsid Epitope Immunogenicity Across Diverse HLA Backgrounds: A Comparative Guide]. BenchChem, [2026]. [Online PDF]. Available at: [https://www.benchchem.com/product/b15624170/docs#aav-8-capsid-epitope-immunogenicity-across-diverse-hla-backgrounds-a-comparative-guide]

Disclaimer & Data Validity:

The information provided in this document is for Research Use Only (RUO) and is strictly not intended for diagnostic or therapeutic procedures. While BenchChem strives to provide accurate protocols, we make no warranties, express or implied, regarding the fitness of this product for every specific experimental setup.

Technical Support: The protocols provided are for reference purposes. Unsure if this reagent suits your experiment?

Need Industrial/Bulk Grade? Request Custom Synthesis Quote

© 2026 BenchChem. All rights reserved.

BenchChem

Our mission is to be the trusted global source of essential and advanced chemicals, empowering scientists and researchers to drive progress in science and industry.

Contact

Address: 3281 E Guasti Rd

Ontario, CA 91761, United States

Phone: (601) 213-4426

Email: info@benchchem.com

Contact our Ph.D. Support Team for a compatibility check

© 2026 BenchChem. All rights reserved.