Interpreting unexpected results in 4BP-TQS experiments.

Author: BenchChem Technical Support Team. **Date**: April 2026

Compound of Interest

Compound Name:	*4BP-TQS*
Cat. No.:	*B15620618*

Get Quote

4BP-TQS Experiments: Technical Support Center

This technical support center provides troubleshooting guidance for researchers, scientists, and drug development professionals working with **4BP-TQS**. The following frequently asked questions (FAQs) and troubleshooting guides address common unexpected results and provide detailed experimental protocols.

Frequently Asked Questions (FAQs) & Troubleshooting

FAQ 1: Unexpected Agonist Activity

Question: I am observing a strong response when applying **4BP-TQS** alone, without any orthosteric agonist like acetylcholine. I thought **4BP-TQS** was a Positive Allosteric Modulator (PAM). Is this a sign of contamination or an experimental artifact?

Answer: No, this is the expected behavior of **4BP-TQS**. It is not a conventional PAM but is classified as an "allosteric agonist" or an "ago-PAM".[1][2][3] This means it can directly activate

© 2026 BenchChem. All rights reserved.

the α7 nicotinic acetylcholine receptor (α7 nAChR) by binding to an allosteric site within the transmembrane domain, a location distinct from the binding site of acetylcholine.[4][5][6] In fact, **4BP-TQS** is a potent agonist, in some cases producing a maximal response that is significantly larger than that produced by acetylcholine.[2][7]

Troubleshooting Guide:

- Confirm Identity: Your result confirms the identity and activity of **4BP-TQS** as an allosteric agonist.
- Characterize the Response: Proceed to characterize the concentration-response relationship to determine the EC50 for its agonist activity.
- Test for PAM Activity: To observe its PAM activity, apply **4BP-TQS** at a low concentration (e.g., near its EC10) in conjunction with an orthosteric agonist like acetylcholine. You should observe a potentiation of the acetylcholine-evoked response.

FAQ 2: Atypical Response Kinetics and Desensitization

Question: The response elicited by **4BP-TQS** has a much slower onset and does not show the rapid desensitization I typically see with acetylcholine. Is this normal?

Answer: Yes, this is a key characteristic of activation by **4BP-TQS**. Unlike the rapid activation and desensitization seen with orthosteric agonists, responses to **4BP-TQS** have a slower onset, are slower to reach a plateau, and show little to no desensitization.[7] This difference in kinetics is one of the key lines of evidence that **4BP-TQS** activates the receptor through a different, allosteric mechanism.[6][7] Furthermore, **4BP-TQS** can facilitate the recovery of α7 nAChRs from a desensitized state.[1][6]

Data Summary: Comparison of Agonist Properties

© 2026 BenchChem. All rights reserved.

Feature	Acetylcholine (Orthosteric Agonist)	4BP-TQS (Allosteric Agonist)
Binding Site	Extracellular Orthosteric Site	Transmembrane Allosteric Site[5][6]
Activation Kinetics	Fast onset[6][7]	Slow onset[7]
Desensitization	Rapid and pronounced	Minimal or absent[7]
EC50 (in oocytes)	~128 ± 12 µM[1]	~17 ± 3 µM to 28 ± 3 µM[1][2]
Hill Slope (nH)	~1.3 ± 0.2[7]	~2.3 ± 0.4[7]
Maximal Response	Normalized to 100%	Can be >40-fold larger than Acetylcholine[2][7]

FAQ 3: No Response or Significantly Reduced Response

Question: I am not observing any response to **4BP-TQS**, even at high concentrations, but my cells still respond to acetylcholine. What could be the issue?

Answer: This scenario strongly suggests an issue with the allosteric binding site for **4BP-TQS**, rather than the overall health of the α7 nAChRs. There are two primary possibilities:

- Site-Specific Mutations: The binding site for **4BP-TQS** is located in a transmembrane cavity. A single amino acid mutation in this region, such as M253L, can completely block agonist activation by **4BP-TQS** without significantly affecting the response to acetylcholine.[5][6][7]
- Presence of Inhibitory Gene Products: In certain human-derived cell models, the expression of the human-specific gene CHRFAM7A can reduce the functional response to α7 agonists, including **4BP-TQS**.[1] This gene produces a truncated, non-functional subunit that can co-assemble with full-length α7 subunits and negatively impact receptor function.

Troubleshooting Guide:

© 2026 BenchChem. All rights reserved.

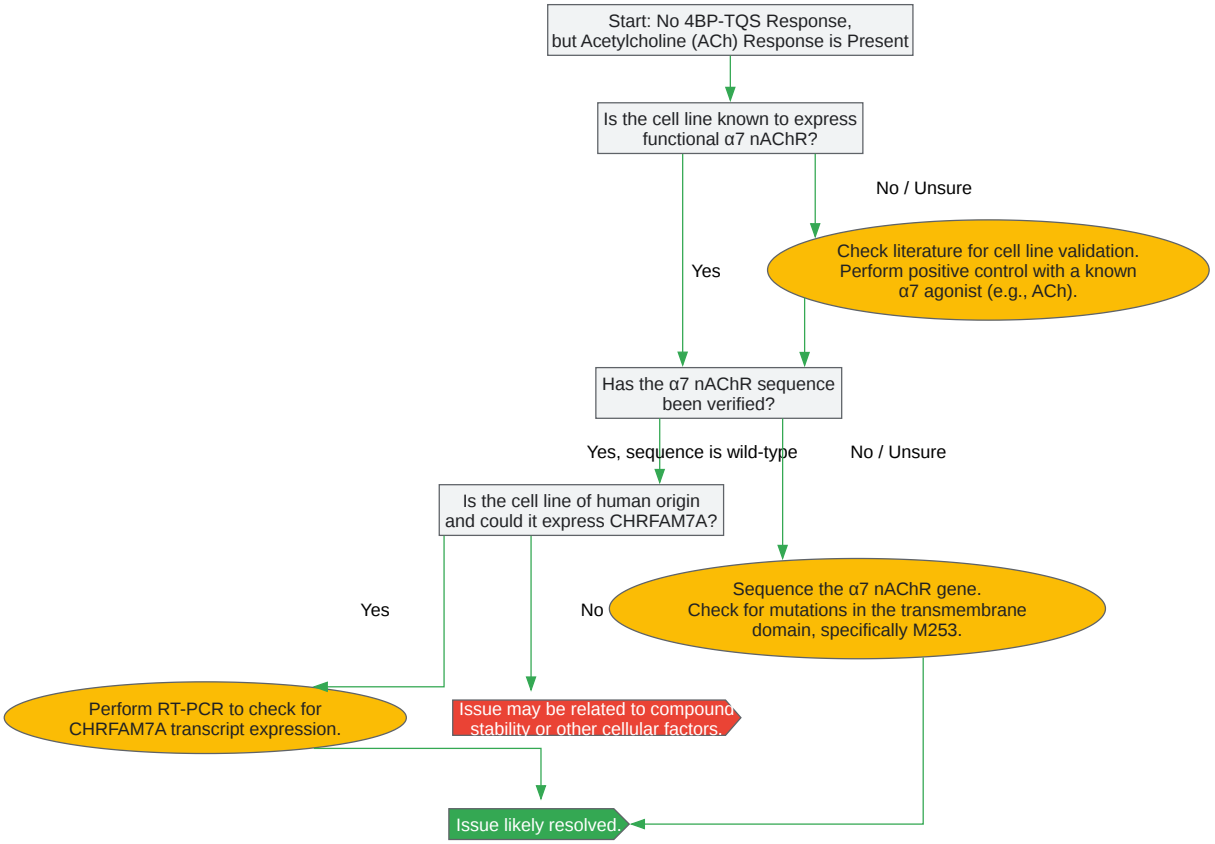

Click to download full resolution via product page

*Caption: Troubleshooting logic for lack of **4BP-TQS** response.*

© 2026 BenchChem. All rights reserved.

FAQ 4: Inconsistent Results Between Batches

Question: I've noticed significant variability in the potency and efficacy of **4BP-TQS** from different synthesis batches. Why would this happen?

Answer: **4BP-TQS** is a chiral molecule, meaning it exists as two non-superimposable mirror images called enantiomers. Research has shown that the biological activity resides almost exclusively in the (+)-enantiomer, also known as GAT107.[2][3] The (–)-enantiomer has negligible activity as either an agonist or a PAM.[2] Therefore, if you are using a racemic mixture (a 50:50 mix of both enantiomers), any batch-to-batch variation in the enantiomeric ratio will lead to significant differences in experimental results.

Troubleshooting Guide:

- Verify Compound Source: Whenever possible, source enantiomerically pure (+)-**4BP-TQS** (GAT107) for your experiments to ensure consistency and maximal potency.
- Check Certificate of Analysis: If using a racemic mixture, request the certificate of analysis from the supplier to check for consistency in the enantiomeric excess (ee) between batches.
- Consider Resolution: If you have access to chiral HPLC, you can resolve the enantiomers from a racemic mixture.

Key Experimental Protocols

Protocol 1: Two-Electrode Voltage-Clamp (TEVC) in Xenopus Oocytes

This protocol is used to measure ion channel activity in response to agonists.

Methodology:

- Oocyte Preparation: Harvest and defolliculate Stage V–VI oocytes from Xenopus laevis.
- cRNA Injection: Inject oocytes with cRNA encoding the human α7 nAChR. For troubleshooting, you may also use constructs with specific mutations (e.g., M253L in the allosteric site or W148F in the orthosteric site).[5]

© 2026 BenchChem. All rights reserved.

- Incubation: Incubate the injected oocytes for 2-5 days at 18°C to allow for receptor expression.
- Recording:
  - Place an oocyte in a recording chamber and perfuse with recording buffer.
  - Impale the oocyte with two glass electrodes filled with 3M KCl to clamp the membrane potential (typically at -60 mV).
  - Establish a stable baseline current.
- Compound Application: Apply compounds by perfusion.
  - To measure agonist activity, apply varying concentrations of **4BP-TQS** and record the peak inward current.
  - To measure PAM activity, co-apply a low concentration of **4BP-TQS** with a standard concentration of acetylcholine.
- Data Analysis: Plot the peak current against the compound concentration to generate a dose-response curve and calculate the EC50 and Hill coefficient.

Experimental Workflow Diagram:

© 2026 BenchChem. All rights reserved.

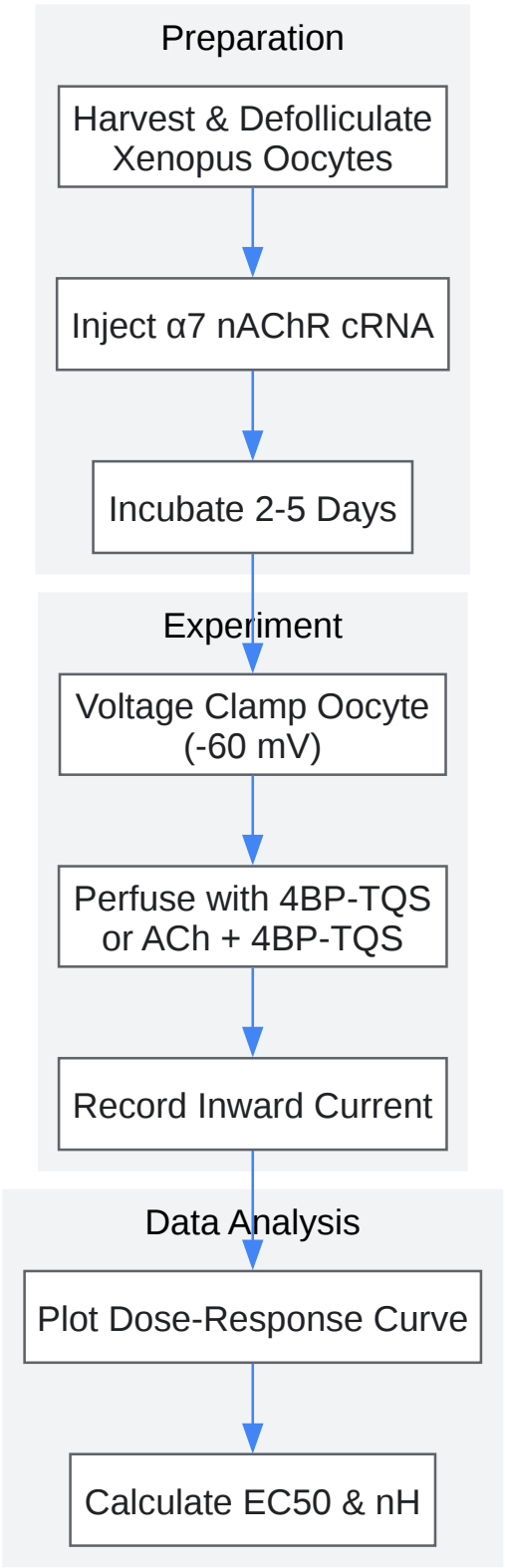

Click to download full resolution via product page

*Caption: Workflow for TEVC analysis of **4BP-TQS** in oocytes.*

© 2026 BenchChem. All rights reserved.

Protocol 2: Calcium Imaging in Mammalian Cells

This protocol measures intracellular calcium influx, a downstream consequence of α7 nAChR activation, which is a calcium-permeable channel.

Methodology:

- Cell Culture: Plate mammalian cells (e.g., HEK293 or SH-SY5Y) stably or transiently expressing α7 nAChR onto black-walled, clear-bottom 96-well plates.
- Dye Loading: Incubate cells with a calcium-sensitive fluorescent dye (e.g., Fluo-4 AM) according to the manufacturer's instructions. This is typically done for 30-60 minutes at 37°C.
- Wash: Gently wash the cells with a physiological buffer (e.g., Hanks' Balanced Salt Solution with calcium) to remove excess dye.
- Compound Addition: Use an automated liquid handler or a multi-channel pipette to add varying concentrations of **4BP-TQS** to the wells.
- Fluorescence Reading: Immediately begin reading the fluorescence intensity over time using a plate reader equipped for fluorescence measurement (e.g., FLIPR or FlexStation). The signal increase corresponds to calcium influx upon channel activation.
- Data Analysis: Calculate the peak fluorescence response over baseline for each concentration. Plot these values to generate a dose-response curve.

Signaling Pathway Visualization

The following diagram illustrates the distinct binding sites and activation mechanisms of the orthosteric agonist acetylcholine versus the allosteric agonist **4BP-TQS** on the α7 nAChR.

© 2026 BenchChem. All rights reserved.

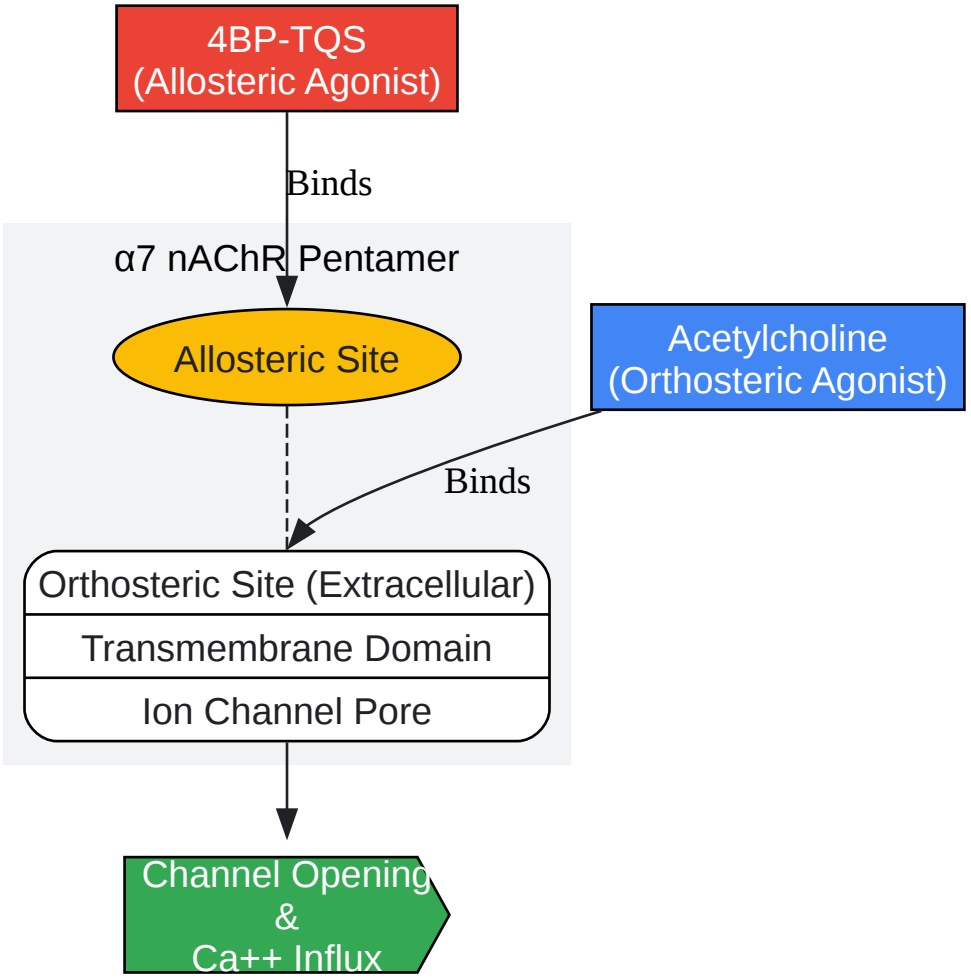

Click to download full resolution via product page

*Caption: Distinct binding sites for ACh and **4BP-TQS** on the α7 nAChR.*

Need Custom Synthesis?

BenchChem offers custom synthesis for rare earth carbides and specific isotopiclabeling.

Email: info@benchchem.com or Request Quote Online.

References

- 1. researchgate.net [researchgate.net]
- 2. Expeditious Synthesis, Enantiomeric Resolution and Enantiomer Functional Characterization of (4-(4-bromophenyl)-3a, 4, 5, 9b-tetrahydro-3H-cyclopenta[c]quinoline-8-

© 2026 BenchChem. All rights reserved.

sulfonamide (4BP-TQS): an Allosteric agonist-Positive Allosteric Modulator of α7 Nicotinic Acetylcholine Receptors - PMC [pmc.ncbi.nlm.nih.gov]

- 3. Structural basis for allosteric agonism of human α7 nicotinic acetylcholine receptors - PMC [pmc.ncbi.nlm.nih.gov]
- 4. medchemexpress.com [medchemexpress.com]
- 5. Agonist activation of alpha7 nicotinic acetylcholine receptors via an allosteric transmembrane site - PubMed [pubmed.ncbi.nlm.nih.gov]
- 6. Agonist activation of α7 nicotinic acetylcholine receptors via an allosteric transmembrane site - PMC [pmc.ncbi.nlm.nih.gov]
- 7. researchgate.net [researchgate.net]
- To cite this document: BenchChem. [Interpreting unexpected results in 4BP-TQS experiments.]. BenchChem, [2026]. [Online PDF]. Available at: [https://www.benchchem.com/product/b15620618/docs#interpreting-unexpected-results-in-4bp-tqs-experiments]

Disclaimer & Data Validity:

The information provided in this document is for Research Use Only (RUO) and is strictly not intended for diagnostic or therapeutic procedures. While BenchChem strives to provide accurate protocols, we make no warranties, express or implied, regarding the fitness of this product for every specific experimental setup.

Technical Support: The protocols provided are for reference purposes. Unsure if this reagent suits your experiment?

Need Industrial/Bulk Grade? Request Custom Synthesis Quote

BenchChem

Our mission is to be the trusted global source of essential and advanced chemicals, empowering scientists and researchers to drive progress in science and industry.

Contact

Address: 3281 E Guasti Rd

Ontario, CA 91761, United States

Phone: (601) 213-4426

Email: info@benchchem.com

© 2026 BenchChem. All rights reserved.

Contact our Ph.D. Support Team for a compatibility check

© 2026 BenchChem. All rights reserved.