VU0467154 in Alzheimer's Disease Models: A Technical Guide

Author: BenchChem Technical Support Team. **Date**: April 2026

Compound of Interest

Compound Name: *VU0467154*

Cat. No.: *B15619928*

Get Quote

Introduction

Alzheimer's disease (AD) is a progressive neurodegenerative disorder characterized by cognitive decline, memory loss, and behavioral disturbances. A key pathological hallmark of AD is the degeneration of the basal forebrain cholinergic system, which plays a critical role in cognitive functions like learning and memory.[1][2][3] Current treatments, such as acetylcholinesterase inhibitors (AChEIs), aim to amplify cholinergic signaling but are often limited by a lack of receptor subtype selectivity, leading to dose-limiting side effects.[1][4] This has spurred the development of more targeted therapies, including subtype-selective modulators of muscarinic acetylcholine receptors (mAChRs).

VU0467154 is a potent and selective positive allosteric modulator (PAM) of the M4 muscarinic acetylcholine receptor.[5] As a PAM, it does not activate the receptor directly but enhances the affinity and/or efficacy of the endogenous neurotransmitter, acetylcholine (ACh).[6][7] The M4 receptor is strategically expressed in brain regions implicated in AD pathology and symptomatology, making it a promising therapeutic target.[6][8] Preclinical studies in various rodent models suggest that **VU0467154** can ameliorate deficits relevant to AD, such as disruptions in sleep-wake architecture and cognitive impairments.[1][8][9] This technical guide

© 2026 BenchChem. All rights reserved.

provides an in-depth overview of the preclinical data, experimental methodologies, and underlying mechanisms of **VU0467154** in the context of Alzheimer's disease research.

Core Mechanism of Action

VU0467154 functions by binding to an allosteric site on the M4 receptor, a site distinct from the orthosteric binding pocket where acetylcholine binds.[6] This binding event induces a conformational change in the receptor that increases its sensitivity to acetylcholine. The M4 receptor is a Gi/o-coupled G-protein coupled receptor (GPCR). Upon activation, it inhibits adenylyl cyclase, leading to a decrease in intracellular cyclic AMP (cAMP) levels and modulation of downstream ion channels. By potentiating the action of endogenous ACh, **VU0467154** enhances this signaling cascade, offering a mechanism to restore cholinergic tone in a disease state where cholinergic transmission is compromised.

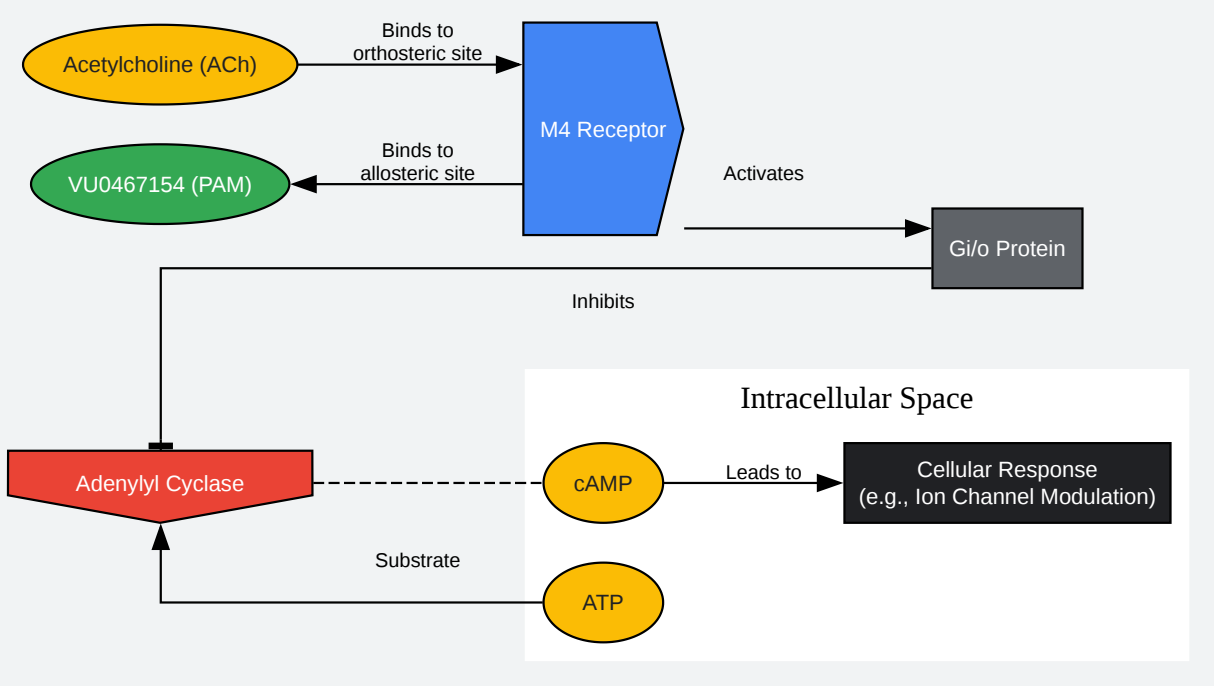

Click to download full resolution via product page

Caption: M4 PAM Signaling Pathway.

Data Presentation: Preclinical Efficacy

© 2026 BenchChem. All rights reserved.

Quantitative data from in vitro and in vivo studies highlight the potency, selectivity, and therapeutic potential of **VU0467154**.

Table 1: In Vitro Pharmacological Profile of VU0467154

This table summarizes the potency of **VU0467154** in potentiating acetylcholine's effect at M4 receptors across different species and its selectivity over other muscarinic receptor subtypes.

Parameter	Species	Value	Reference
Potency (pEC_{50})	Rat M4	7.75 (17.7 nM)	[9]
	Human M4	6.2	[5]
	Cynomolgus Monkey M4	6.0	[5]
Selectivity	Rat & Human M1, M2, M3, M5	No potentiation of ACh response	[5][9]
Effect on ACh Affinity	Rat M4	14.5-fold increase	[9]

Table 2: Effects of VU0467154 on Sleep-Wake Architecture in Aged Mice

This table presents the effects of **VU0467154** on key sleep parameters, which are often disrupted in Alzheimer's disease.

© 2026 BenchChem. All rights reserved.

Animal Model	Dose (mg/kg)	Key Findings	Reference
Young and Aged Mice	30	- Increased NREM sleep in both active and inactive phases.	[1]
		- Increased delta power during NREM sleep.	[1]
		- Decreased arousal.	[1]
		- Reduced NREM sleep fragmentation in the inactive phase.	[1]
		- Effects were attenuated by the M4 antagonist VU6028418.	[1]

Table 3: In Vivo Behavioral Effects of **VU0467154**

This table details the efficacy of **VU0467154** in rodent models assessing antipsychotic-like and pro-cognitive effects.

© 2026 BenchChem. All rights reserved.

Behavioral Assay	Animal Model	Dose Range (mg/kg, i.p.)	Key Findings	Reference
MK-801-Induced Hyperlocomotion	Wild-type Mice	0.3 - 30	- Robust, dose-dependent reversal of hyperlocomotion.	[5][9]
M4 Knockout Mice	N/A	- Failed to reverse stimulant-induced deficits.	[9]	
Associative Learning (Fear Conditioning)	Wild-type Mice	N/A	- Reversed MK-801-induced deficits.	[9]
- Enhanced acquisition of contextual and cue-dependent fear conditioning when administered alone.	[9]			
Amphetamine-Induced Hyperlocomotion	Rats & Mice	0.3 - 30	- Dose-dependent reversal of hyperlocomotion.	[5]

Experimental Protocols

Detailed methodologies are crucial for the replication and interpretation of scientific findings. The following sections describe the core protocols used to evaluate **VU0467154**.

In Vitro Assays

© 2026 BenchChem. All rights reserved.

1. Calcium Mobilization Assay: This assay measures the potency of a PAM by detecting increases in intracellular calcium following receptor activation.

- Cell Lines: CHO or HEK293 cells stably expressing the M4 receptor of the desired species (rat, human).
- Procedure:
  - Cells are plated and loaded with a calcium-sensitive fluorescent dye (e.g., Fluo-4 AM).
  - A baseline fluorescence reading is established.
  - Acetylcholine is added at a concentration that elicits approximately 20% of its maximum response (EC_{20}).
  - Varying concentrations of **VU0467154** are added.
  - The change in fluorescence, corresponding to intracellular calcium mobilization, is measured using a fluorometric imaging plate reader (FLIPR).
  - Data are normalized to the maximum response produced by a saturating concentration of ACh to determine the EC_{50} of the PAM.[9]

2. Radioligand Binding Assay: This assay determines if a PAM alters the binding affinity of the orthosteric ligand (ACh).

- Preparation: Cell membranes expressing the M4 receptor.
- Radioligand: [^{3}H]N-methylscopolamine ([^{3}H]NMS), a radiolabeled antagonist that binds to the orthosteric site.
- Procedure:
  - Membranes are incubated with a fixed concentration of [^{3}H]NMS.
  - A fixed concentration of **VU0467154** (e.g., 10 µM) is added to the experimental group.
  - Increasing concentrations of unlabeled acetylcholine are added to displace the [^{3}H]NMS.

© 2026 BenchChem. All rights reserved.

- The amount of bound radioactivity is measured.
- The resulting competition curve is analyzed to determine the IC_{50} of ACh in the presence and absence of the PAM. A leftward shift in the curve indicates that the PAM increases the affinity of ACh for the receptor.[9]

In Vivo Assays

1. Sleep-Wake Architecture Monitoring: This protocol assesses the effects of **VU0467154** on sleep patterns in mice.

- Animal Model: Young (3-4 months) and aged (20-22 months) C57BL/6J mice.[1]
- Surgical Implantation: Mice are surgically implanted with telemetry devices (e.g., DSI HD-X02) for continuous monitoring of electroencephalography (EEG) and electromyography (EMG) signals.
- Data Acquisition: After a recovery period, EEG/EMG data are recorded continuously. Sleep-wake states (Wake, NREM, REM) are scored in 10-second epochs using analysis software.
- Dosing and Analysis: **VU0467154** (e.g., 30 mg/kg) or vehicle is administered via intraperitoneal (i.p.) injection during either the light (inactive) or dark (active) phase. Key parameters like total time in each state, bout duration, and EEG power spectra (e.g., delta power during NREM) are analyzed.[1]

© 2026 BenchChem. All rights reserved.

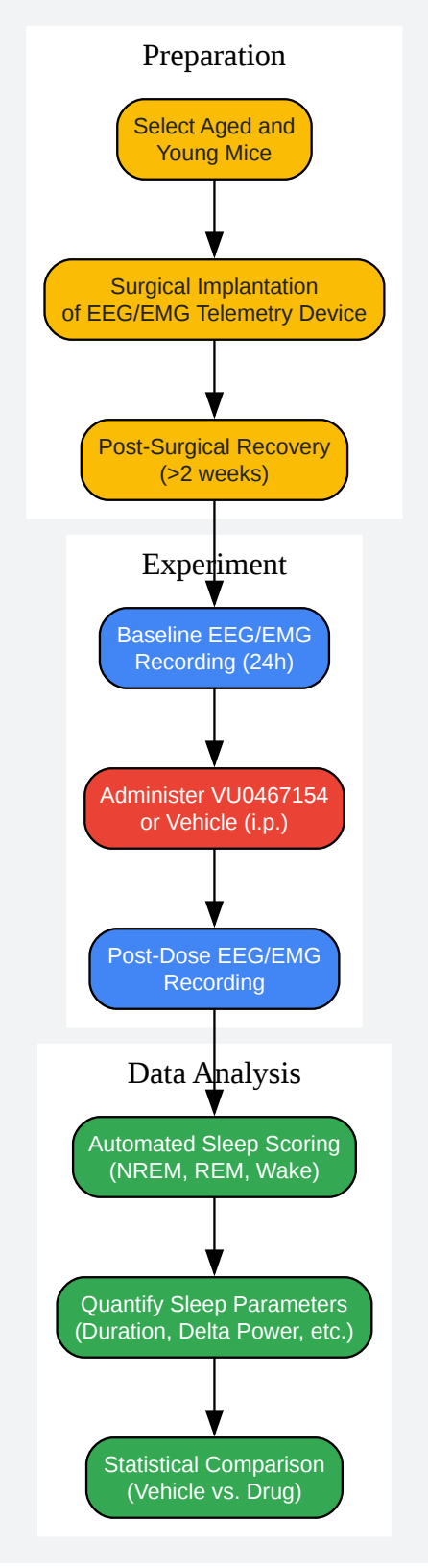

Click to download full resolution via product page

Caption: Experimental workflow for sleep-wake architecture studies.

© 2026 BenchChem. All rights reserved.

2. MK-801-Induced Hyperlocomotion: This is a common preclinical model to assess antipsychotic-like activity. MK-801, an NMDAR antagonist, induces hyperlocomotion that can be reversed by antipsychotic drugs.

- Animal Model: Rats or mice.
- Apparatus: Open field arenas equipped with photobeam detectors to measure locomotor activity.
- Procedure:
  - Animals are habituated to the testing room and then to the open field arena.
  - Animals are pre-treated with **VU0467154** or vehicle via i.p. injection.
  - After a set pre-treatment time (e.g., 30 minutes), animals are challenged with MK-801 (e.g., 0.1-0.3 mg/kg).
  - Locomotor activity (e.g., distance traveled, beam breaks) is recorded for a specified period (e.g., 60-120 minutes).
  - A reduction in MK-801-induced activity by **VU0467154** indicates efficacy.[9][10]

Therapeutic Hypothesis and Implications for Alzheimer's Disease

The rationale for using an M4 PAM like **VU0467154** in Alzheimer's disease is based on the well-established cholinergic deficit. By selectively enhancing signaling through M4 receptors, **VU0467154** may offer a way to restore cholinergic function with greater precision and fewer side effects than non-selective agents.

The preclinical data suggest two primary areas of potential benefit:

- Symptomatic Cognitive Enhancement: M4 receptors are involved in modulating cognitive processes. By enhancing associative learning and reversing pharmacologically-induced cognitive deficits in rodents, **VU0467154** shows promise for addressing the cognitive symptoms of AD.[9]

© 2026 BenchChem. All rights reserved.

- Management of Behavioral Symptoms: Sleep disturbances are a major behavioral issue in AD patients, contributing to caregiver burden and patient morbidity. The ability of **VU0467154** to normalize sleep-wake architecture and improve sleep quality in aged mice is a significant finding, suggesting it could alleviate these symptoms.[1]

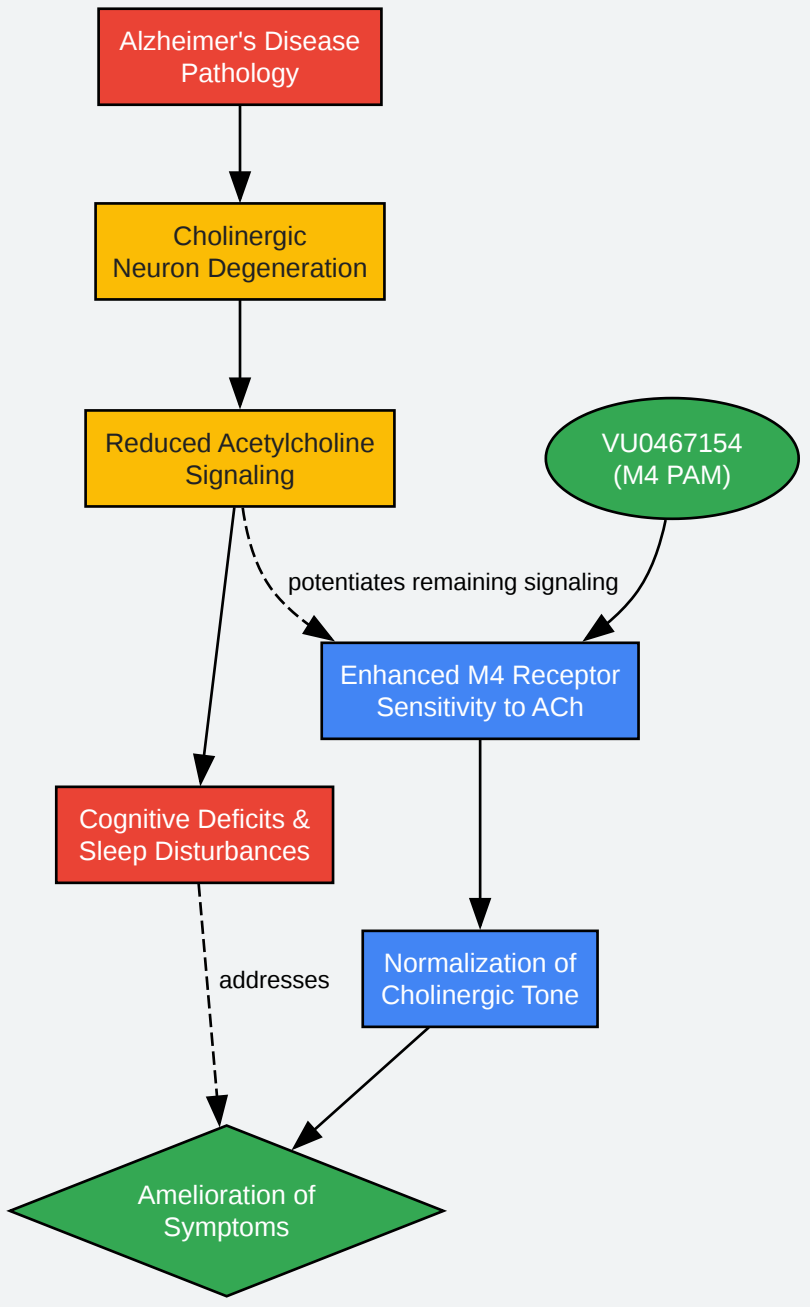

Click to download full resolution via product page

Caption: Therapeutic hypothesis for **VU0467154** in Alzheimer's Disease.

© 2026 BenchChem. All rights reserved.

Conclusion

VU0467154 is a selective M4 PAM with a compelling preclinical profile for potential application in Alzheimer's disease. Its mechanism of action, which enhances endogenous cholinergic signaling, is highly relevant to the underlying neurobiology of AD. In vivo studies have demonstrated its ability to correct behavioral and physiological deficits analogous to symptoms seen in AD patients, particularly in the domains of cognition and sleep. The data gathered from robust preclinical models and assays provide a strong rationale for the continued investigation of M4-selective positive allosteric modulators as a targeted therapeutic strategy for Alzheimer's disease.

Need Custom Synthesis?

BenchChem offers custom synthesis for rare earth carbides and specific isotopiclabeling.

Email: info@benchchem.com or Request Quote Online.

References

- 1. researchgate.net [researchgate.net]
- 2. Cholinergic neurodegeneration in Alzheimer disease mouse models - PubMed [pubmed.ncbi.nlm.nih.gov]
- 3. mdpi.com [mdpi.com]
- 4. files.core.ac.uk [files.core.ac.uk]
- 5. medchemexpress.com [medchemexpress.com]
- 6. Activation of M1 and M4 muscarinic receptors as potential treatments for Alzheimer’s disease and schizophrenia - PMC [pmc.ncbi.nlm.nih.gov]
- 7. catalog.library.vanderbilt.edu [catalog.library.vanderbilt.edu]
- 8. Optimized Administration of the M4 PAM VU0467154 Demonstrates Broad Efficacy, but Limited Effective Concentrations in Mecp2+/– Mice - PMC [pmc.ncbi.nlm.nih.gov]
- 9. Selective Activation of M4 Muscarinic Acetylcholine Receptors Reverses MK-801-Induced Behavioral Impairments and Enhances Associative Learning in Rodents - PMC [pmc.ncbi.nlm.nih.gov]
- 10. researchgate.net [researchgate.net]

© 2026 BenchChem. All rights reserved.

- To cite this document: BenchChem. [VU0467154 in Alzheimer's Disease Models: A Technical Guide]. BenchChem, [2026]. [Online PDF]. Available at: [https://www.benchchem.com/product/b15619928/docs#vu0467154-in-alzheimer-s-disease-models-a-technical-guide]

Disclaimer & Data Validity:

The information provided in this document is for Research Use Only (RUO) and is strictly not intended for diagnostic or therapeutic procedures. While BenchChem strives to provide accurate protocols, we make no warranties, express or implied, regarding the fitness of this product for every specific experimental setup.

Technical Support: The protocols provided are for reference purposes. Unsure if this reagent suits your experiment?

Need Industrial/Bulk Grade? Request Custom Synthesis Quote

BenchChem

Our mission is to be the trusted global source of essential and advanced chemicals, empowering scientists and researchers to drive progress in science and industry.

Contact

Address: 3281 E Guasti Rd

Ontario, CA 91761, United States

Phone: (601) 213-4426

Email: info@benchchem.com

Contact our Ph.D. Support Team for a compatibility check