Unveiling ACTH(1-16): A Technical Guide to its Physiology and Measurement

Author: BenchChem Technical Support Team. **Date**: April 2026

Compound of Interest

Compound Name: *ACTH (1-16) (human)*

Cat. No.: *B15619837*

Get Quote

For Researchers, Scientists, and Drug Development Professionals

This in-depth technical guide delves into the physiological significance and analytical considerations of the N-terminal fragment of Adrenocorticotropic Hormone, ACTH(1-16). While the full-length ACTH(1-39) is widely studied for its role in stimulating cortisol production, the biological functions and circulating levels of its fragments, such as ACTH(1-16), are less characterized yet of growing interest in endocrine research. This document provides a comprehensive overview of the origin of ACTH(1-16), its signaling mechanisms, and the methodologies available for its detection and quantification.

The Genesis of ACTH(1-16): A Product of Pro-opiomelanocortin (POMC) Processing

Adrenocorticotropic hormone and its related peptides originate from a large precursor protein called pro-opiomelanocortin (POMC).[1][2] The processing of POMC is a tissue-specific enzymatic cascade that gives rise to a variety of biologically active peptides. In the anterior pituitary corticotroph cells, the primary prohormone convertase, PC1, cleaves POMC to yield ACTH(1-39), β-lipotropin, and other fragments.[3] Further processing of ACTH(1-39) can occur, although it is less predominant in the anterior pituitary. In other tissues, such as the

© 2026 BenchChem. All rights reserved.

hypothalamus and skin, where both PC1 and PC2 are expressed, ACTH(1-39) can be further cleaved to produce α-melanocyte-stimulating hormone (α-MSH), which is identical to ACTH(1-13), and corticotropin-like intermediate lobe peptide (CLIP), corresponding to ACTH(18-39).[4] The generation of ACTH(1-16) as a distinct, stable, and secreted endogenous peptide is not well-documented in the literature, and it may exist as a transient intermediate in the processing of ACTH.

© 2026 BenchChem. All rights reserved.

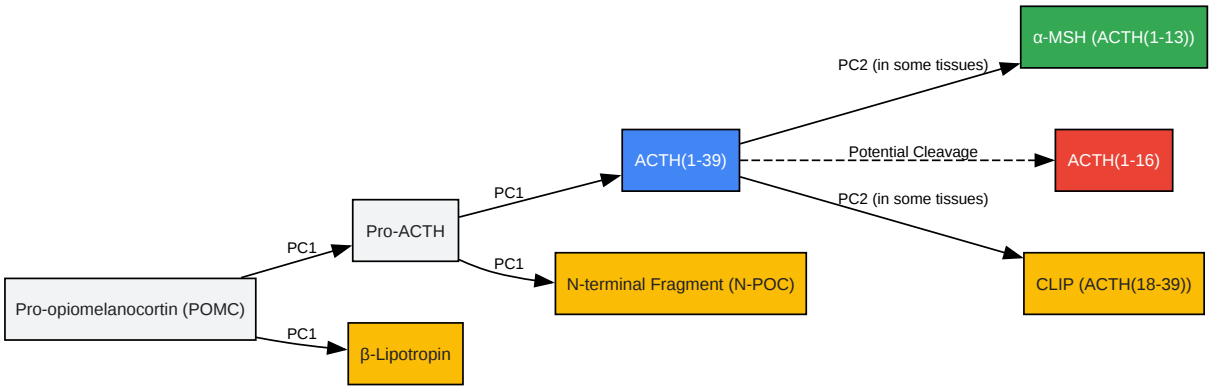

© 2026 BenchChem. All rights reserved.

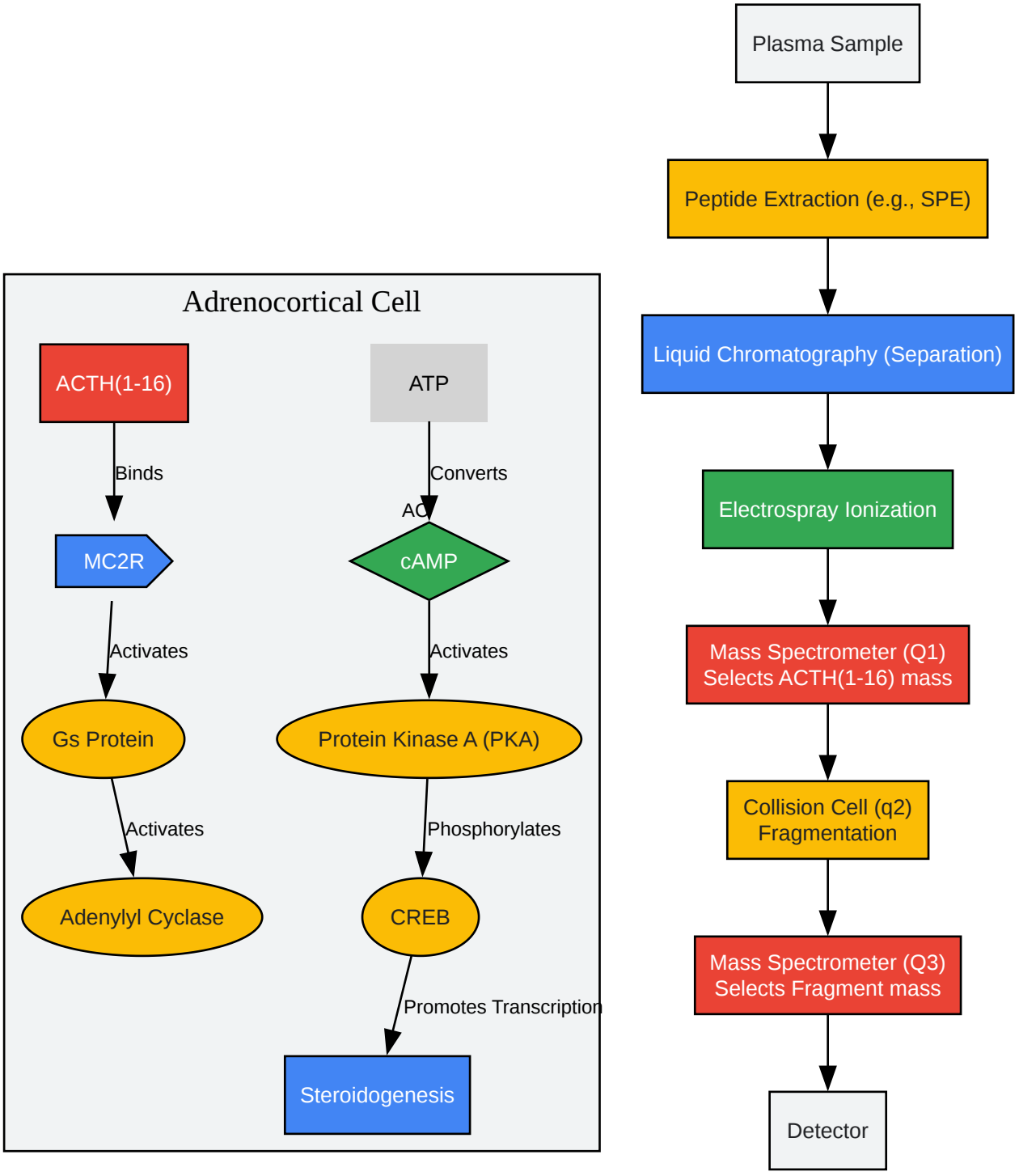

Click to download full resolution via product page

Need Custom Synthesis?

BenchChem offers custom synthesis for rare earth carbides and specific isotopiclabeling.

Email: info@benchchem.com or Request Quote Online.

© 2026 BenchChem. All rights reserved.

References

- 1. journals.physiology.org [journals.physiology.org]
- 2. academic.oup.com [academic.oup.com]
- 3. Proopiomelanocortin-derived peptides - PubMed [pubmed.ncbi.nlm.nih.gov]
- 4. Normal Physiology of ACTH and GH Release in the Hypothalamus and Anterior Pituitary in Man - Endotext - NCBI Bookshelf [ncbi.nlm.nih.gov]
- To cite this document: BenchChem. [Unveiling ACTH(1-16): A Technical Guide to its Physiology and Measurement]. BenchChem, [2026]. [Online PDF]. Available at: [https://www.benchchem.com/product/b15619837/docs#unveiling-acth-1-16-a-technical-guide-to-its-physiology-and-measurement]

Disclaimer & Data Validity:

The information provided in this document is for Research Use Only (RUO) and is strictly not intended for diagnostic or therapeutic procedures. While BenchChem strives to provide accurate protocols, we make no warranties, express or implied, regarding the fitness of this product for every specific experimental setup.

Technical Support: The protocols provided are for reference purposes. Unsure if this reagent suits your experiment?

Need Industrial/Bulk Grade? Request Custom Synthesis Quote

BenchChem

Our mission is to be the trusted global source of essential and advanced chemicals, empowering scientists and researchers to drive progress in science and industry.

Contact

Address: 3281 E Guasti Rd

Ontario, CA 91761, United States

Phone: (601) 213-4426

Email: info@benchchem.com

© 2026 BenchChem. All rights reserved.

Contact our Ph.D. Support Team for a compatibility check

© 2026 BenchChem. All rights reserved.