experimental design for CM764 treatment

Author: BenchChem Technical Support Team. **Date**: April 2026

Compound of Interest

Compound Name:	*CM764*
Cat. No.:	*B15618078*

Get Quote

Disclaimer

The following application note and protocols are provided as a template for the experimental design for a hypothetical compound, **CM764**. As publicly available information on "**CM764**" is not available, this document is based on the assumed mechanism of action of **CM764** as a potent and selective inhibitor of the PI3K/Akt/mTOR signaling pathway, a critical regulator of cell growth and survival. The data presented are illustrative and intended to guide researchers in designing their own experiments.

Application Notes and Protocols for **CM764**, a PI3K/Akt/mTOR Pathway Inhibitor

For Researchers, Scientists, and Drug Development Professionals

Introduction

The Phosphoinositide 3-kinase (PI3K)/Akt/mammalian Target of Rapamycin (mTOR) signaling pathway is a crucial intracellular cascade that governs cell proliferation, growth, survival, and metabolism. Dysregulation of this pathway is a hallmark of various human diseases, particularly cancer, making it a prime target for therapeutic intervention.[1][2] **CM764** is a novel, potent, and highly selective small molecule inhibitor designed to target key components of the

© 2026 BenchChem. All rights reserved.

PI3K/Akt/mTOR pathway. These application notes provide a comprehensive overview of the experimental design for the preclinical evaluation of **CM764**, including in vitro characterization and in vivo efficacy assessment.

Mechanism of Action

CM764 exerts its biological effects by inhibiting the kinase activity of PI3K, which in turn prevents the phosphorylation and activation of its downstream effector, Akt. The subsequent decrease in Akt activity leads to the deactivation of mTORC1 and mTORC2 complexes, central regulators of protein synthesis, cell growth, and survival.[3] By blocking this signaling cascade, **CM764** is hypothesized to induce cell cycle arrest, promote apoptosis, and inhibit tumor growth in cancer cells with an overactive PI3K/Akt/mTOR pathway.

Data Presentation

Table 1: In Vitro Cytotoxicity of CM764 in Human Cancer Cell Lines

The half-maximal inhibitory concentration (IC50) of **CM764** was determined in a panel of human cancer cell lines after 72 hours of continuous exposure, using a standard MTT assay.

Cell Line	Cancer Type	PIK3CA Mutation Status	IC50 (nM)
MCF-7	Breast Cancer	E545K (Activating)	50
PC-3	Prostate Cancer	Wild-Type	250
U87 MG	Glioblastoma	PTEN Null	75
A549	Lung Cancer	Wild-Type	500
HCT116	Colorectal Cancer	H1047R (Activating)	30

Table 2: Effect of CM764 on Cell Cycle Distribution in MCF-7 Cells

MCF-7 cells were treated with **CM764** at the indicated concentrations for 24 hours, and the cell cycle distribution was analyzed by flow cytometry after propidium iodide staining.

© 2026 BenchChem. All rights reserved.

Treatment	G0/G1 Phase (%)	S Phase (%)	G2/M Phase (%)
Vehicle (DMSO)	55.2 ± 2.1	30.5 ± 1.8	14.3 ± 1.5
CM764 (50 nM)	75.8 ± 3.5	15.1 ± 2.0	9.1 ± 1.2
CM764 (100 nM)	82.3 ± 2.9	10.2 ± 1.7	7.5 ± 1.0

Table 3: Pharmacokinetic Profile of CM764 in BALB/c Mice

Pharmacokinetic parameters were determined in male BALB/c mice following a single intravenous (IV) or oral (PO) administration of **CM764** at 10 mg/kg.

Parameter	Intravenous (IV)	Oral (PO)
Cmax (ng/mL)	1500 ± 210	450 ± 95
Tmax (h)	0.1	1.0
AUC (0-inf) (ng·h/mL)	3200 ± 450	1800 ± 320
t1/2 (h)	2.5 ± 0.5	3.0 ± 0.7
Bioavailability (%)	-	56

Experimental Protocols

In Vitro Cell Viability (MTT Assay)

This protocol outlines the procedure for determining the cytotoxic effects of **CM764** on cancer cell lines.

Materials:

- Cancer cell lines of interest
- Complete growth medium (e.g., DMEM with 10% FBS)
- **CM764** stock solution (e.g., 10 mM in DMSO)

© 2026 BenchChem. All rights reserved.

- 96-well cell culture plates
- MTT (3-(4,5-dimethylthiazol-2-yl)-2,5-diphenyltetrazolium bromide) solution (5 mg/mL in PBS)
- Solubilization buffer (e.g., 10% SDS in 0.01 M HCl)
- Microplate reader

Procedure:

- Seed cells in a 96-well plate at a density of 5,000-10,000 cells/well in 100 µL of complete growth medium.
- Incubate the plate overnight at 37°C in a humidified atmosphere with 5% CO2.
- Prepare serial dilutions of **CM764** in complete growth medium.
- Remove the medium from the wells and add 100 µL of the diluted **CM764** or vehicle control (medium with DMSO).
- Incubate the plate for 72 hours at 37°C.
- Add 20 µL of MTT solution to each well and incubate for 4 hours at 37°C.
- Remove the medium and add 100 µL of solubilization buffer to each well to dissolve the formazan crystals.
- Measure the absorbance at 570 nm using a microplate reader.
- Calculate the percentage of cell viability relative to the vehicle-treated control and determine the IC50 value using non-linear regression analysis.

Western Blot Analysis of PI3K/Akt/mTOR Pathway

This protocol describes the detection of key phosphorylated proteins in the PI3K/Akt/mTOR pathway following **CM764** treatment.

Materials:

© 2026 BenchChem. All rights reserved.

- Cancer cell lines
- 6-well cell culture plates
- **CM764**
- RIPA lysis buffer with protease and phosphatase inhibitors
- BCA protein assay kit
- SDS-PAGE gels
- PVDF membrane
- Primary antibodies (e.g., anti-p-Akt (Ser473), anti-Akt, anti-p-mTOR (Ser2448), anti-mTOR, anti-GAPDH)
- HRP-conjugated secondary antibodies
- Enhanced chemiluminescence (ECL) substrate
- Imaging system

Procedure:

- Seed cells in 6-well plates and grow to 70-80% confluency.
- Treat cells with various concentrations of **CM764** or vehicle for the desired time (e.g., 2-24 hours).
- Wash the cells with ice-cold PBS and lyse them with RIPA buffer.
- Determine the protein concentration of the lysates using the BCA protein assay.
- Denature 20-30 µg of protein from each sample by boiling in Laemmli buffer.
- Separate the proteins by SDS-PAGE and transfer them to a PVDF membrane.
- Block the membrane with 5% non-fat milk or BSA in TBST for 1 hour at room temperature.

© 2026 BenchChem. All rights reserved.

- Incubate the membrane with primary antibodies overnight at 4°C.
- Wash the membrane with TBST and incubate with HRP-conjugated secondary antibodies for 1 hour at room temperature.
- Wash the membrane again and detect the protein bands using an ECL substrate and an imaging system.

In Vivo Xenograft Tumor Model

This protocol details the evaluation of the anti-tumor efficacy of **CM764** in a mouse xenograft model.

Materials:

- Immunocompromised mice (e.g., nude or SCID mice)
- Human cancer cells (e.g., MCF-7)
- Matrigel
- **CM764** formulation for in vivo administration
- Vehicle control
- Calipers for tumor measurement

Procedure:

- Subcutaneously inject 5-10 million cancer cells mixed with Matrigel into the flank of each mouse.
- Monitor the mice until tumors reach a palpable size (e.g., 100-150 mm^3).
- Randomize the mice into treatment and control groups (n=8-10 mice per group).
- Administer **CM764** (e.g., daily via oral gavage) or vehicle control to the respective groups.

© 2026 BenchChem. All rights reserved.

- Measure tumor volume with calipers every 2-3 days using the formula: Volume = (Length x Width²) / 2.
- Monitor the body weight of the mice as an indicator of toxicity.
- At the end of the study (e.g., after 21 days or when tumors in the control group reach the maximum allowed size), euthanize the mice and excise the tumors for further analysis (e.g., western blotting, immunohistochemistry).
- Compare the tumor growth rates between the treated and control groups to determine the efficacy of **CM764**.

Mandatory Visualizations

© 2026 BenchChem. All rights reserved.

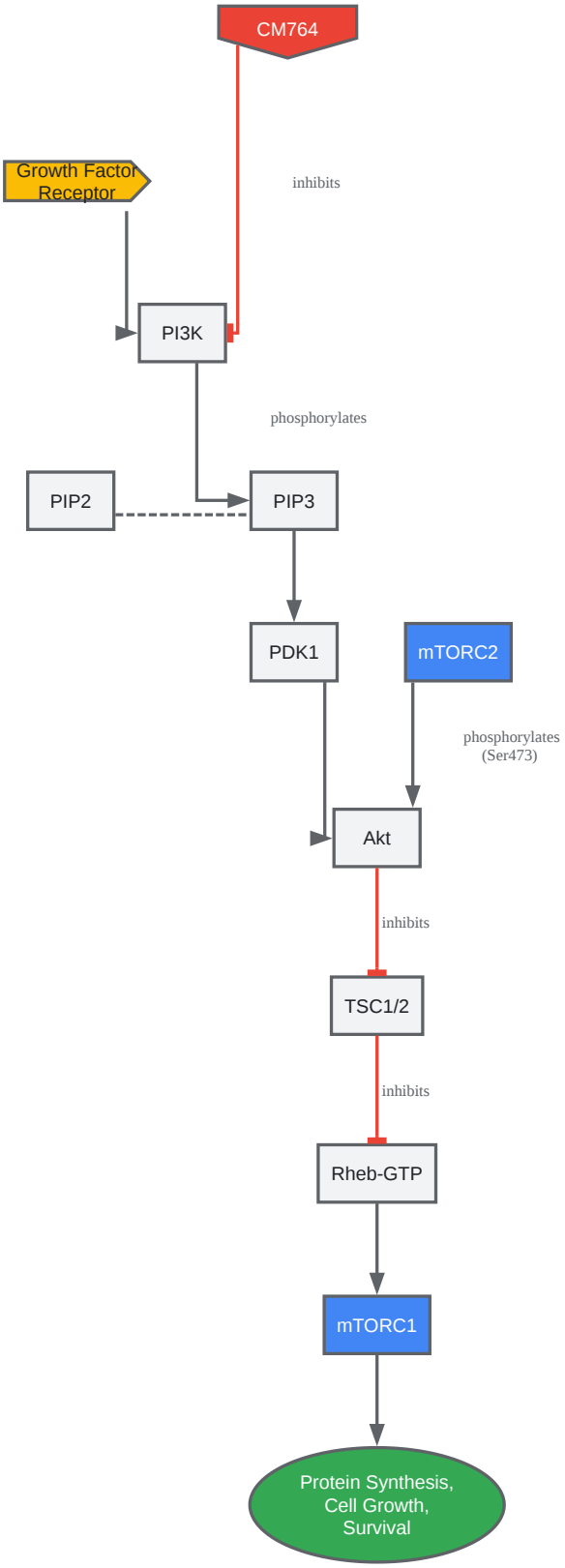

Click to download full resolution via product page

Caption: The PI3K/Akt/mTOR signaling pathway with the inhibitory action of **CM764** on PI3K.

© 2026 BenchChem. All rights reserved.

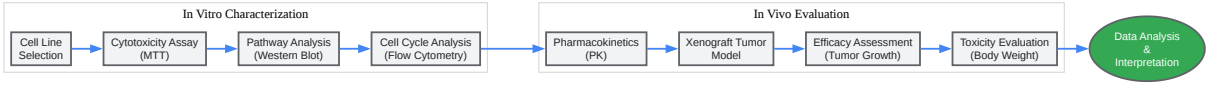

Click to download full resolution via product page

Caption: Experimental workflow for the preclinical evaluation of **CM764**.

Need Custom Synthesis?

BenchChem offers custom synthesis for rare earth carbides and specific isotopiclabeling.

Email: info@benchchem.com or Request Quote Online.

References

- 1. mdpi.com [mdpi.com]
- 2. Antcin K inhibits chondrosarcoma motility by reducing MMP-7 expression via downregulation of the PI3K, Akt, mTOR and NF-κB signaling pathway - PMC [pmc.ncbi.nlm.nih.gov]
- 3. mTOR Signaling | Cell Signaling Technology [cellsignal.com]
- To cite this document: BenchChem. [experimental design for CM764 treatment]. BenchChem, [2026]. [Online PDF]. Available at: [https://www.benchchem.com/product/b15618078/docs#experimental-design-for-cm764-treatment]

Disclaimer & Data Validity:

The information provided in this document is for Research Use Only (RUO) and is strictly not intended for diagnostic or therapeutic procedures. While BenchChem strives to provide accurate protocols, we make no warranties, express or implied, regarding the fitness of this product for every specific experimental setup.

© 2026 BenchChem. All rights reserved.

Technical Support: The protocols provided are for reference purposes. Unsure if this reagent suits your experiment?

Need Industrial/Bulk Grade? Request Custom Synthesis Quote

BenchChem

Our mission is to be the trusted global source of essential and advanced chemicals, empowering scientists and researchers to drive progress in science and industry.

Contact

Address: 3281 E Guasti Rd

Ontario, CA 91761, United States

Phone: (601) 213-4426

Email: info@benchchem.com

Contact our Ph.D. Support Team for a compatibility check

© 2026 BenchChem. All rights reserved.