Sugemalimab Technical Support Center: Histology-Specific Efficacy

Author: BenchChem Technical Support Team. **Date**: April 2026

Compound of Interest

Compound Name:	*Sugemalimab*
CAS No.:	*2256084-03-2*
Cat. No.:	*B15611319*

Get Quote

This technical support center provides researchers, scientists, and drug development professionals with detailed information on the impact of tumor histology on the effectiveness of **Sugemalimab**. The following question-and-answer format addresses specific issues that may be encountered during experimentation and clinical research.

Frequently Asked Questions (FAQs)

Q1: How does the histological subtype of non-small cell lung cancer (NSCLC) affect the efficacy of **Sugemalimab** in combination with chemotherapy?

A1: In the GEMSTONE-302 study, **Sugemalimab** in combination with chemotherapy has demonstrated a survival benefit in first-line treatment for patients with metastatic NSCLC, regardless of their tumor pathology.[1] For patients with squamous NSCLC, the median Overall Survival (OS) was 23.3 months in the **Sugemalimab** group compared to 12.2 months in the placebo group.[1] In the non-squamous NSCLC subgroup, the median OS was 26.9 months for those treated with **Sugemalimab** versus 19.8 months for those on placebo.[1] The Objective Response Rate (ORR) was 70.5% in the squamous group and 58.6% in the non-squamous group for patients receiving **Sugemalimab**.[1]

© 2026 BenchChem. All rights reserved.

Q2: What is the efficacy of **Sugemalimab** in gastric or gastroesophageal junction (G/GEJ) adenocarcinoma?

A2: The GEMSTONE-303 study showed that for patients with PD-L1 expression (Combined Positive Score [CPS] ≥5), **Sugemalimab** combined with chemotherapy significantly improved survival in the first-line treatment of locally advanced or metastatic G/GEJ adenocarcinoma.[2][3] The median OS was 15.6 months in the **Sugemalimab** arm versus 12.6 months in the placebo arm.[2][3] The median Progression-Free Survival (PFS) was 7.6 months with **Sugemalimab** compared to 6.1 months with placebo.[2][3] The ORR was 68.6% in the **Sugemalimab** group versus 52.7% in the placebo group.[2]

Q3: What is the effectiveness of **Sugemalimab** in esophageal squamous cell carcinoma (ESCC)?

A3: In the GEMSTONE-304 trial, **Sugemalimab** in combination with chemotherapy as a first-line treatment for unresectable locally advanced, recurrent, or metastatic ESCC demonstrated a statistically significant improvement in both PFS and OS.[4][5] The median PFS was 6.2 months for the **Sugemalimab** group compared to 5.4 months for the placebo group.[4][5] The median OS was 15.3 months with **Sugemalimab** versus 11.5 months with placebo.[5][6]

Q4: Has **Sugemalimab** shown efficacy in hematological malignancies?

A4: Yes, in the GEMSTONE-201 study, **Sugemalimab** monotherapy demonstrated robust and durable antitumor activity in patients with relapsed or refractory extranodal natural killer/T-cell lymphoma (R/R ENKTL).[7][8] The Objective Response Rate (ORR) assessed by an independent review committee was 44.9%, with a complete response rate of 35.9%.[7][8][9]

Troubleshooting Guide

Problem 1: Suboptimal response to **Sugemalimab** in a patient with NSCLC.

- Possible Cause 1: Tumor Histology. While **Sugemalimab** is effective in both squamous and non-squamous NSCLC, response rates can differ. Review the patient's specific histology and compare efficacy data from the GEMSTONE-302 trial.[1]
- Possible Cause 2: PD-L1 Expression Level. Although the benefit of **Sugemalimab** in NSCLC was observed regardless of PD-L1 expression, patients with a PD-L1 expression of 1% or

© 2026 BenchChem. All rights reserved.

greater had the highest ORR at 70.9%.[1] Confirm the PD-L1 status of the tumor.

- Possible Cause 3: Concurrent Medications. The use of systemic corticosteroids or other immunosuppressants before starting treatment can interfere with the efficacy of **Sugemalimab**.

Problem 2: A patient with G/GEJ adenocarcinoma is not responding to **Sugemalimab** plus chemotherapy.

- Possible Cause 1: PD-L1 Expression. The GEMSTONE-303 trial enrolled patients with a PD-L1 CPS of 5 or greater.[3] A low or negative PD-L1 status may be associated with a reduced likelihood of response.

- Possible Cause 2: Acquired Resistance. Although not fully elucidated for **Sugemalimab**, mechanisms of acquired resistance to immune checkpoint inhibitors can include alterations in antigen presentation pathways or the evolution of the tumor microenvironment.

Problem 3: Managing immune-related adverse events (irAEs).

- General Guidance: Most irAEs are reversible and can be managed by interrupting **Sugemalimab** treatment, administering corticosteroids, and providing supportive care. For severe (Grade 3 or 4) toxicities, permanent discontinuation of **Sugemalimab** may be necessary.

- Specific irAEs:

  - Pneumonitis: Was reported in 3.0% of patients receiving **Sugemalimab** in combination with chemotherapy. Management involves treatment interruption or discontinuation based on severity.

  - Nephritis: Occurred in 1.8% of patients. Management includes interruption or discontinuation of treatment.

  - Hypophysitis: Was seen in 0.9% of patients and was generally low-grade.

  - Adrenal Insufficiency: Reported in 0.2% of patients.

© 2026 BenchChem. All rights reserved.

Data on **Sugemalimab** Efficacy by Tumor Histology

© 2026 BenchChem. All rights reserved.

Tumor Histology	Clinical Trial	Treatment Arm	Control Arm	Efficacy Metric	Sugemalimab Value	Placebo Value
Non-Small Cell Lung Cancer (Squamous)	GEMSTONE-302	Sugemalimab + Chemo	Placebo + Chemo	Median OS	23.3 months[1]	12.2 months[1]
ORR	70.5%[1]	46.0%[1]				
Non-Small Cell Lung Cancer (Non-Squamous)	GEMSTONE-302	Sugemalimab + Chemo	Placebo + Chemo	Median OS	26.9 months[1]	19.8 months[1]
ORR	58.6%[1]	36.5%[1]				
Gastric/Gastroesophageal Junction Adenocarcinoma (PD-L1 CPS ≥5)	GEMSTONE-303	Sugemalimab + Chemo	Placebo + Chemo	Median OS	15.6 months[2][3]	12.6 months[2][3]
Median PFS	7.6 months[2][3]	6.1 months[2][3]				
ORR	68.6%[2]	52.7%[2]				
Esophageal Squamous Cell Carcinoma	GEMSTONE-304	Sugemalimab + Chemo	Placebo + Chemo	Median OS	15.3 months[5][6]	11.5 months[5][6]

© 2026 BenchChem. All rights reserved.

Median PFS	6.2 months[4][5]	5.4 months[4][5]				
Relapsed/ Refractory Extranodal NK/T-Cell Lymphoma	GEMSTONE-201	Sugemalimab Monotherapy	N/A (Single Arm)	ORR	44.9%[7][8]	N/A
Complete Response Rate	35.9%[7][8][9]	N/A				

Experimental Protocols

GEMSTONE-302 (Metastatic NSCLC)

- Design: A randomized, double-blind, phase 3 trial.
- Participants: Patients with previously untreated metastatic squamous or non-squamous NSCLC without known EGFR, ALK, ROS1, or RET aberrations.
- Intervention: **Sugemalimab** (1200 mg intravenously every 3 weeks) or placebo, in combination with platinum-based chemotherapy for up to four cycles, followed by maintenance therapy.
- Primary Endpoint: Investigator-assessed Progression-Free Survival (PFS).[10]

GEMSTONE-303 (Gastric/GEJ Adenocarcinoma)

- Design: A randomized, double-blind, placebo-controlled, phase 3 trial conducted at 54 sites in China.[9][11]
- Participants: Patients with unresectable locally advanced or metastatic gastric or gastroesophageal junction adenocarcinoma with a PD-L1 CPS of 5 or greater who had not received prior systemic therapy.[9][11]

© 2026 BenchChem. All rights reserved.

- Intervention: **Sugemalimab** (1200 mg intravenously) or placebo every 3 weeks for up to 24 months, plus capecitabine and oxaliplatin (CAPOX) every 3 weeks for up to 6 cycles.[9][10]
- Primary Endpoints: Overall Survival (OS) and investigator-assessed Progression-Free Survival (PFS).[9][10]

GEMSTONE-304 (Esophageal Squamous Cell Carcinoma)

- Design: A randomized, double-blind, multi-center, placebo-controlled Phase 3 trial.[12]
- Participants: Patients with unresectable locally advanced, recurrent, or metastatic ESCC who had not received prior systemic treatment.[6]
- Intervention: **Sugemalimab** (1200 mg) or placebo every 3 weeks for up to 24 months, combined with cisplatin and 5-fluorouracil chemotherapy for up to six cycles.[6]
- Primary Endpoints: Blinded Independent Central Review (BICR)-assessed PFS and OS.[12]

GEMSTONE-201 (Relapsed/Refractory ENKTL)

- Design: A single-arm, multicenter, phase 2 study.[7]
- Participants: Patients with relapsed or refractory extranodal natural killer/T-cell lymphoma.
- Intervention: **Sugemalimab** 1200 mg intravenously once every 3 weeks for up to 24 months.[7]
- Primary Endpoint: Objective Response Rate (ORR) as assessed by an independent radiologic review committee.[7]

Visualizations

© 2026 BenchChem. All rights reserved.

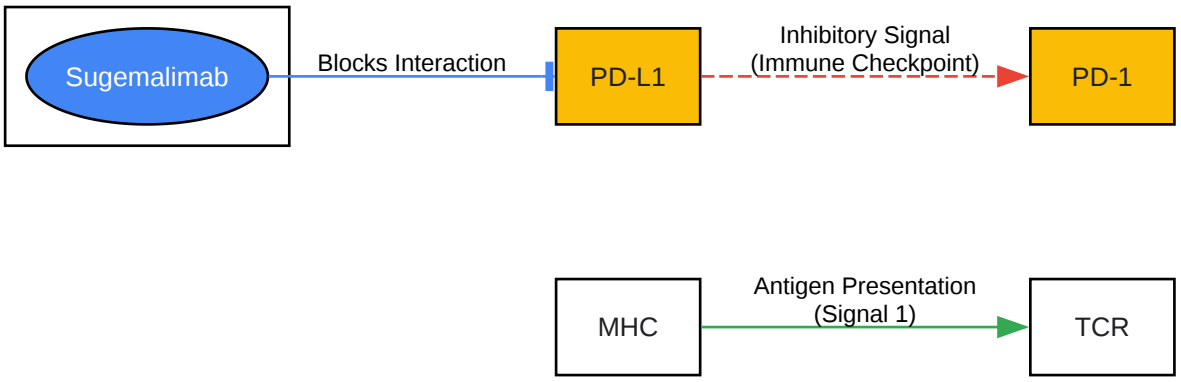

Click to download full resolution via product page

Caption: PD-1/PD-L1 Signaling Pathway and **Sugemalimab**'s Mechanism of Action.

© 2026 BenchChem. All rights reserved.

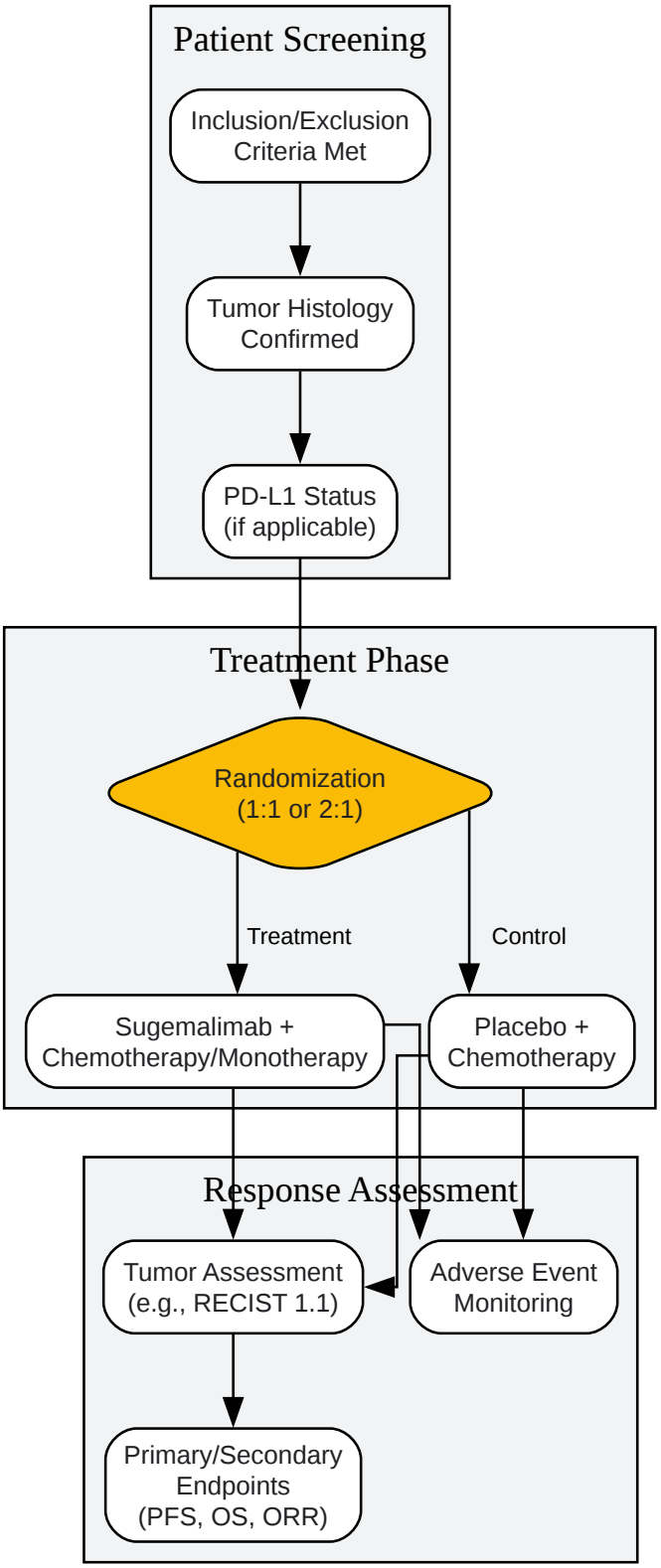

Click to download full resolution via product page

Caption: Generalized Experimental Workflow for **Sugemalimab** Clinical Trials.

© 2026 BenchChem. All rights reserved.

Need Custom Synthesis?

BenchChem offers custom synthesis for rare earth carbides and specific isotopiclabeling.

Email: info@benchchem.com or Request Quote Online.

References

- 1. cstonepharma.com [cstonepharma.com]
- 2. Safety, antitumor activity and biomarkers of sugemalimab in Chinese patients with advanced solid tumors or lymphomas: results from the first-in-human phase 1 trial - PMC [pmc.ncbi.nlm.nih.gov]
- 3. ascopubs.org [ascopubs.org]
- 4. cstonepharma.com [cstonepharma.com]
- 5. ssai.ch [ssai.ch]
- 6. researchgate.net [researchgate.net]
- 7. What is Sugemalimab used for? [synapse.patsnap.com]
- 8. researchgate.net [researchgate.net]
- 9. First-Line Sugemalimab Plus Chemotherapy for Advanced Gastric Cancer: The GEMSTONE-303 Randomized Clinical Trial - PMC [pmc.ncbi.nlm.nih.gov]
- 10. First-Line Sugemalimab Plus Chemotherapy for Advanced Gastric Cancer: The GEMSTONE-303 Randomized Clinical Trial - PubMed [pubmed.ncbi.nlm.nih.gov]
- 11. appliedclinicaltrialsonline.com [appliedclinicaltrialsonline.com]
- 12. CStone Presents Results from Phase 3 Study of Sugemalimab in First-Line Esophageal Squamous Cell Carcinoma at ESMO GI 2023-CStone Pharmaceuticals [cstonepharma.com]
- To cite this document: BenchChem. [Sugemalimab Technical Support Center: Histology-Specific Efficacy]. BenchChem, [2026]. [Online PDF]. Available at: [https://www.benchchem.com/product/b15611319/docs#sugemalimab-technical-support-center-histology-specific-efficacy]

Disclaimer & Data Validity:

© 2026 BenchChem. All rights reserved.

The information provided in this document is for Research Use Only (RUO) and is strictly not intended for diagnostic or therapeutic procedures. While BenchChem strives to provide accurate protocols, we make no warranties, express or implied, regarding the fitness of this product for every specific experimental setup.

Technical Support: The protocols provided are for reference purposes. Unsure if this reagent suits your experiment?

Need Industrial/Bulk Grade? Request Custom Synthesis Quote

BenchChem

Our mission is to be the trusted global source of essential and advanced chemicals, empowering scientists and researchers to drive progress in science and industry.

Contact

Address: 3281 E Guasti Rd

Ontario, CA 91761, United States

Phone: (601) 213-4426

Email: info@benchchem.com

Contact our Ph.D. Support Team for a compatibility check

© 2026 BenchChem. All rights reserved.