In Vivo Validation of Scutebarbatine Anti-Tumor Effects: A Comparative Guide

Author: BenchChem Technical Support Team. **Date**: April 2026

Compound of Interest

Compound Name: *Scutebarbatine X*

Cat. No.: *B15609915*

Get Quote

For Researchers, Scientists, and Drug Development Professionals

Disclaimer: While this guide focuses on the anti-tumor effects of Scutebarbatines, it is important to note that specific in vivo experimental data for **Scutebarbatine X** is not currently available in published scientific literature. The data presented herein pertains to other members of the Scutebarbatine family, namely Scutebarbatine A and B, as well as the crude and polysaccharide extracts of Scutellaria barbata, the plant from which these compounds are isolated.

This guide provides a comparative overview of the in vivo anti-tumor efficacy of Scutebarbatine compounds and Scutellaria barbata extracts against various cancer models. It is intended to serve as a resource for researchers and professionals in the field of oncology drug development, offering a structured summary of key experimental findings, detailed methodologies, and insights into the underlying mechanisms of action.

Comparative Efficacy of Scutebarbatines and Scutellaria barbata Extracts

© 2026 BenchChem. All rights reserved.

The following tables summarize the quantitative data from various in vivo studies, showcasing the anti-tumor activity of Scutebarbatine A, Scutebarbatine B, and Scutellaria barbata extracts. Comparisons with conventional chemotherapy agents are included where available.

Table 1: In Vivo Anti-Tumor Activity of Scutebarbatine A

Cancer Type	Animal Model	Cell Line	Treatment and Dosage	Tumor Growth Inhibition	Key Findings
Lung Carcinoma	Nude Mice	A549	Scutebarbatine A (40 mg/kg, i.p.)	Significant suppression of tumor growth compared to control[1]	Induced apoptosis via up-regulation of caspase-3 and caspase-9, and down-regulation of Bcl-2[1][2]
Breast Cancer	Xenograft Models	MDA-MB-231 & MCF-7	Scutebarbatine A	Dose-dependent cytotoxic effect	Induced DNA damage, cell cycle arrest, and apoptosis.[3]
Hepatocellular Carcinoma	Animal Model	-	Scutebarbatine A	Potent antitumor effects	-

Table 2: In Vivo Anti-Tumor Activity of Scutebarbatine B

© 2026 BenchChem. All rights reserved.

Cancer Type	Animal Model	Cell Line	Treatment and Dosage	Tumor Growth Inhibition	Key Findings
Breast Cancer	Mice Xenograft Models	MCF-7	Scutebarbatine B	Significant suppression of tumor growth[4]	Induced DNA damage, G2/M phase arrest, and apoptosis; Blocked pRB/E2F1 and Akt/mTOR pathways.[4]

Table 3: In Vivo Anti-Tumor Activity of Scutellaria barbata (SB) Extracts

© 2026 BenchChem. All rights reserved.

Cancer Type	Animal Model	Cell Line	Treatment and Dosage	Tumor Growth Inhibition	Comparison to Alternatives	Key Findings
Lung Cancer	BALB/c Nude Mice	CL1-5	SB Extract (60 mg/kg, i.p.)	Markedly inhibited tumor growth[5]	Additive effects with etoposide or cisplatin[5]	Decreased angiogenesis, enhanced apoptosis and autophagy.[5]
Hepatoma	H22-bearing Mice	H22	SB Extract (High and Low Dose)	High Dose: 36.98%	High Dose SB + 5-FU: 65.28% vs. 5-FU alone: 42.26%[6][7]	Enhanced efficacy and reduced toxicity of 5-FU.[6][7]
Lung Adenocarcinoma	Nude Mice	Calu-3	Polysaccharides from SB (100 & 200 mg/kg, i.p.)	Significant dose-dependent decrease in tumor volume	Less potent than Herceptin (30 mg/kg)[8]	Inhibited tumor angiogenesis via suppression of the HER2 pathway.[8]
Hepatocellular Carcinoma	Nude Mice	HepG2 & Huh7	SB Extract (Intragastric)	Significantly smaller and lighter tumors	Not specified	Induced ferroptosis of HCC cells.[9]

© 2026 BenchChem. All rights reserved.

Colon Tumor	Mice	HCT116 & colon26	SB Water Extract (615 & 1230 mg/kg, oral)	28.7% and 36.9% reduction in tumor weight, respectively	Scutellarin (7 mg/kg): 28.8% reduction[10]	Ameliorated lung metastasis.[10]
Lewis Lung Carcinoma	C57BL/6 Mice	Lewis	SB Extract (3.33, 6.67, 10 g crude drug/kg/d)	27.57%, 33.56%, and 44.41% inhibition, respectively	Not specified	Inhibited tumor growth through regulating immune function.[11]

Experimental Protocols

Detailed methodologies are crucial for the replication and validation of scientific findings. Below are summaries of the experimental protocols used in the cited in vivo studies.

General Xenograft Model Protocol

- Cell Culture: Human cancer cell lines (e.g., A549, CL1-5, Calu-3, HepG2, Huh7, HCT116) are cultured in appropriate media supplemented with fetal bovine serum and antibiotics.
- Animal Models: Immunocompromised mice, typically BALB/c nude mice or C57BL/6 mice, are used to prevent rejection of human tumor xenografts.[5][8][9]
- Tumor Cell Implantation: A specific number of cancer cells (e.g., 1.5 x 10^6 CL1-5 cells, 1 x 10^7 HepG2 or Huh7 cells) are suspended in a solution like PBS or a mixture with Matrigel and injected subcutaneously into the flank of the mice.[5][9]
- Treatment Administration:

© 2026 BenchChem. All rights reserved.

- Scutebarbatine A/B or Scutellaria barbata Extract: Administered via intraperitoneal (i.p.) injection or intragastric administration at specified dosages and frequencies.[5][8][9]
- Control Group: Receives a vehicle control (e.g., PBS, saline).[5][9]
- Alternative Therapy Group: Receives a standard chemotherapy agent (e.g., 5-Fluorouracil, Cisplatin, Herceptin) for comparison.[6][7][8]

- Monitoring and Endpoint Analysis:
  - Tumor volume is measured periodically using calipers and calculated using the formula: Volume = (length × width²) / 2.[5]
  - The body weight of the mice is monitored to assess toxicity.[8]
  - At the end of the study, mice are euthanized, and tumors are excised, weighed, and processed for further analysis (e.g., immunohistochemistry for proliferation markers like Ki-67 or apoptosis-related proteins).[9]

Signaling Pathways and Mechanisms of Action

Scutebarbatines and Scutellaria barbata extracts exert their anti-tumor effects through the modulation of multiple signaling pathways. The diagrams below, generated using the DOT language, illustrate some of the key pathways identified in the literature.

© 2026 BenchChem. All rights reserved.

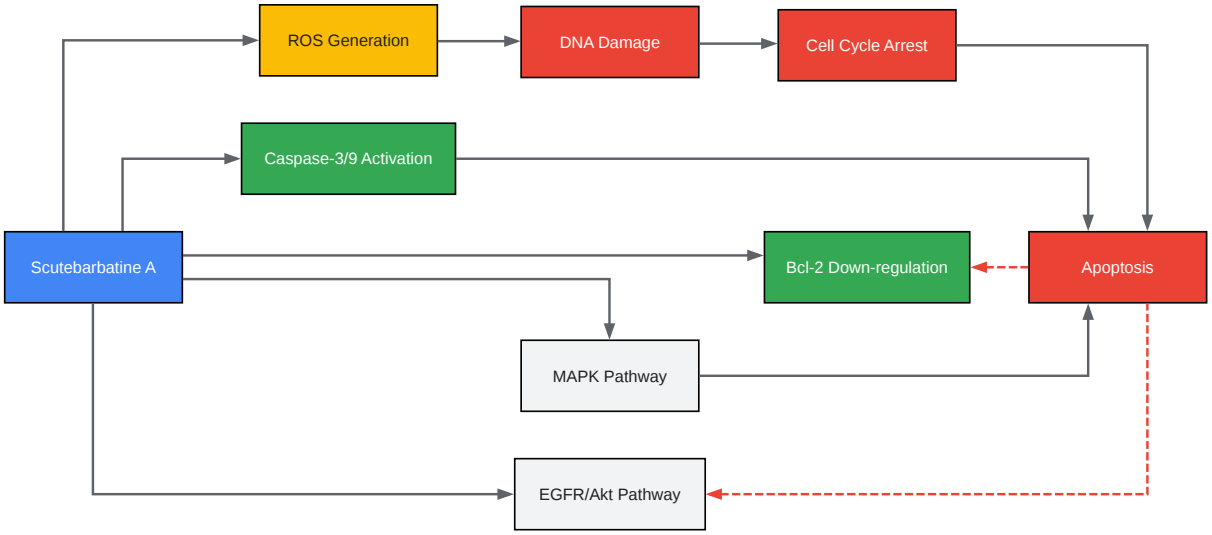

Click to download full resolution via product page

Caption: Signaling pathways modulated by Scutebarbatine A.

© 2026 BenchChem. All rights reserved.

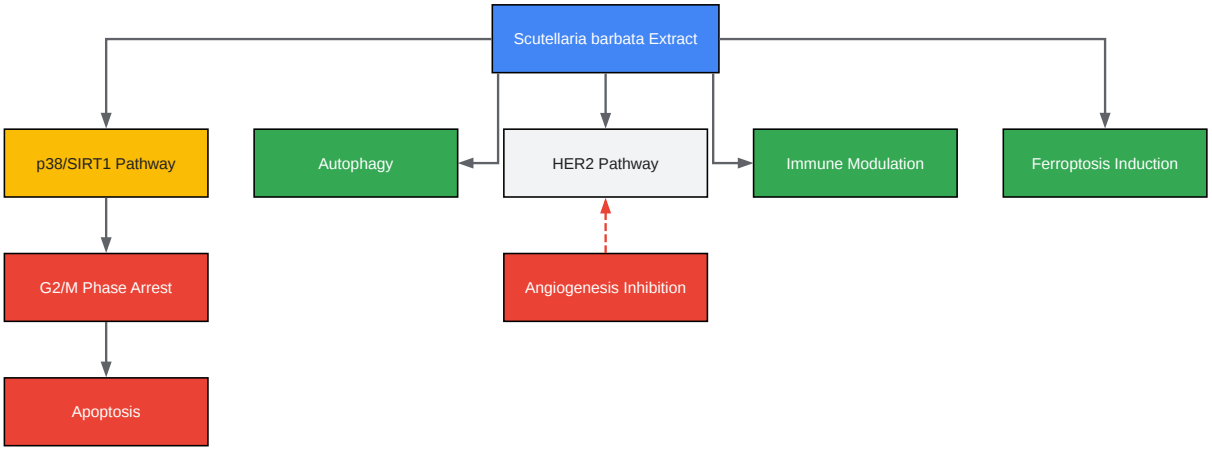

Click to download full resolution via product page

Caption: Anti-tumor mechanisms of Scutellaria barbata extract.

Conclusion

The available in vivo data suggests that Scutebarbatine A, Scutebarbatine B, and extracts from Scutellaria barbata hold significant promise as anti-tumor agents. They have demonstrated efficacy in various cancer models, often working through multiple mechanisms including the induction of apoptosis, cell cycle arrest, and inhibition of angiogenesis. Furthermore, studies have indicated a potential for synergistic effects when used in combination with conventional chemotherapies, potentially enhancing efficacy while reducing toxicity.

The lack of specific in vivo data for **Scutebarbatine X** highlights an area for future research. Further investigation into the individual Scutebarbatine compounds, including **Scutebarbatine X**, is warranted to fully elucidate their therapeutic potential and mechanisms of action. Direct, head-to-head comparative studies with a broader range of standard-of-care chemotherapeutics would also be invaluable for positioning these natural compounds in the landscape of cancer therapy.

© 2026 BenchChem. All rights reserved.

Need Custom Synthesis?

BenchChem offers custom synthesis for rare earth carbides and specific isotopiclabeling.

Email: info@benchchem.com or Request Quote Online.

References

- 1. In Vitro and in Vivo Antitumor Activity of Scutebarbatine A on Human Lung Carcinoma A549 Cell Lines - PMC [pmc.ncbi.nlm.nih.gov]
- 2. consensus.app [consensus.app]
- 3. researchgate.net [researchgate.net]
- 4. Scutebarbatine B Exerts Anti-Breast Cancer Activity by Inducing Cell Cycle Arrest and Apoptosis Through Multiple Pathways - PubMed [pubmed.ncbi.nlm.nih.gov]
- 5. The anti-cancer effects and mechanisms of Scutellaria barbata D. Don on CL1-5 lung cancer cells - PMC [pmc.ncbi.nlm.nih.gov]
- 6. Scutellaria barbata extract enhances efficacy and reduces toxicity of chemotherapy in hepatoma H22-bearing mice [jcimjournal.com]
- 7. Scutellaria barbata extract enhances efficacy and reduces toxicity of chemotherapy in hepatoma H22-bearing mice - 西安交通大学 [scholar.xjtu.edu.cn:443]
- 8. Scutellaria barbata D. Don polysaccharides inhibit the growth of Calu-3 xenograft tumors via suppression of the HER2 pathway and angiogenesis - PMC [pmc.ncbi.nlm.nih.gov]
- 9. Scutellaria barbata Inhibits Hepatocellular Carcinoma Tumorigenicity by Inducing Ferroptosis of Hepatocellular Carcinoma Cells - PMC [pmc.ncbi.nlm.nih.gov]
- 10. researchgate.net [researchgate.net]
- 11. Inhibition of Tumor Growth and Immunomodulatory Effects of Flavonoids and Scutebarbatines of Scutellaria barbata D. Don in Lewis-Bearing C57BL/6 Mice - PMC [pmc.ncbi.nlm.nih.gov]
- To cite this document: BenchChem. [In Vivo Validation of Scutebarbatine Anti-Tumor Effects: A Comparative Guide]. BenchChem, [2026]. [Online PDF]. Available at: [https://www.benchchem.com/product/b15609915/docs#in-vivo-validation-of-scutebarbatine-anti-tumor-effects-a-comparative-guide]

Disclaimer & Data Validity:

© 2026 BenchChem. All rights reserved.

The information provided in this document is for Research Use Only (RUO) and is strictly not intended for diagnostic or therapeutic procedures. While BenchChem strives to provide accurate protocols, we make no warranties, express or implied, regarding the fitness of this product for every specific experimental setup.

Technical Support: The protocols provided are for reference purposes. Unsure if this reagent suits your experiment?

Need Industrial/Bulk Grade? Request Custom Synthesis Quote

BenchChem

Our mission is to be the trusted global source of essential and advanced chemicals, empowering scientists and researchers to drive progress in science and industry.

Contact

Address: 3281 E Guasti Rd

Ontario, CA 91761, United States

Phone: (601) 213-4426

Email: info@benchchem.com

Contact our Ph.D. Support Team for a compatibility check

© 2026 BenchChem. All rights reserved.