DBCO-PEG3-C1-acid stability in aqueous buffers

Author: BenchChem Technical Support Team. **Date**: April 2026

Compound of Interest

Compound Name:	*DBCO-PEG3-C1-acid*
Cat. No.:	*B15607025*

Get Quote

Technical Support Center: DBCO-PEG3-C1-acid

This technical support center provides guidance on the stability of **DBCO-PEG3-C1-acid** in aqueous buffers for researchers, scientists, and drug development professionals. Here you will find troubleshooting guides, frequently asked questions (FAQs), and experimental protocols to ensure the successful use of this reagent in your experiments.

Troubleshooting Guide

This guide addresses common issues encountered during the handling and use of **DBCO-PEG3-C1-acid** in aqueous solutions.

© 2026 BenchChem. All rights reserved.

Question	Possible Cause	Solution
Low or no conjugation efficiency in my click reaction.	1. Degradation of DBCO-PEG3-C1-acid: The DBCO group is sensitive to acidic conditions (pH < 5) and can degrade over time in aqueous solutions through oxidation or hydration.[1] 2. Improper storage: Incorrect storage of the solid compound or stock solutions can lead to degradation. 3. Presence of interfering substances: Buffers containing azides or thiols will react with the DBCO group, reducing its availability for the desired reaction.[2] 4. Suboptimal reaction conditions: Incorrect pH, temperature, or reactant concentrations can negatively impact the reaction rate.	1. Use fresh solutions: Prepare aqueous solutions of DBCO-PEG3-C1-acid immediately before use. Avoid prolonged storage in aqueous buffers. 2. Verify storage: Store solid DBCO-PEG3-C1-acid at -20°C, protected from light and moisture. Store stock solutions in anhydrous DMSO or DMF at -20°C and avoid repeated freeze-thaw cycles.[1] 3. Use appropriate buffers: Employ buffers free of azides and thiols, such as phosphate-buffered saline (PBS) at pH 7.0-9.0.[2][3] 4. Optimize reaction conditions: Ensure the reaction is performed within the optimal pH range (7.0-9.0).[3] While the reaction can proceed at temperatures from 4°C to 37°C, room temperature is often a good starting point.[2][4]
I observe a loss of reactivity of my DBCO-conjugated molecule over time.	Instability of the DBCO group: Even after conjugation, the DBCO moiety can slowly degrade, especially with long-term storage in aqueous buffers. A DBCO-modified antibody was reported to lose about 3-5% of its reactivity over four weeks when stored at 4°C.[1][2]	Storage of conjugates: For long-term storage, it is recommended to store DBCO-conjugated molecules at -20°C or -80°C. If storage in an aqueous buffer is necessary, use a sterile, neutral to slightly basic buffer and consider adding a cryoprotectant. Perform functional checks on

© 2026 BenchChem. All rights reserved.

		long-stored conjugates before use.
The DBCO-PEG3-C1-acid is difficult to dissolve in my aqueous buffer.	Low aqueous solubility: Carboxylic acid forms of DBCO linkers can have limited solubility in aqueous buffers, especially at acidic pH. The PEG3 linker enhances hydrophilicity, but solubility issues can still arise.	Use a co-solvent: First, dissolve the DBCO-PEG3-C1-acid in a water-miscible organic solvent such as DMSO or DMF.[1] Then, add this stock solution to your aqueous buffer. Ensure the final concentration of the organic solvent is low (typically <10-20%) to avoid negative effects on your biomolecules.[4]

Frequently Asked Questions (FAQs)

Q1: What are the recommended storage conditions for solid **DBCO-PEG3-C1-acid**?

For long-term stability, solid **DBCO-PEG3-C1-acid** should be stored at -20°C, protected from light and moisture.[1]

Q2: How should I prepare and store stock solutions of **DBCO-PEG3-C1-acid**?

It is recommended to prepare stock solutions in an anhydrous, water-miscible organic solvent like DMSO or DMF.[1] These stock solutions can be stored at -20°C for a limited time, though it is always best to prepare them fresh. Avoid repeated freeze-thaw cycles.

Q3: What is the optimal pH for working with **DBCO-PEG3-C1-acid** in aqueous buffers?

The DBCO group is most stable in buffers with a neutral to slightly basic pH, typically in the range of 7.0 to 9.0.[3] Crucially, you should avoid acidic conditions (pH < 5), as this can cause a rearrangement of the DBCO ring, rendering it unreactive towards azides.

Q4: How stable is **DBCO-PEG3-C1-acid** in aqueous buffers at room temperature?

While specific kinetic data is not readily available, it is known that the DBCO group can degrade over time in aqueous solutions.[1] For optimal results, it is strongly recommended to

© 2026 BenchChem. All rights reserved.

prepare aqueous working solutions of **DBCO-PEG3-C1-acid** immediately prior to your experiment.

Q5: Are there any buffer components I should avoid when working with **DBCO-PEG3-C1-acid**?

Yes, avoid buffers containing sodium azide, as the azide will react with the DBCO group.[2] Buffers containing thiols should also be avoided as they can potentially react with the DBCO moiety.[2]

Data Presentation

Table 1: Stability Profile of DBCO-PEG3-C1-acid in Aqueous Buffers

Condition	Observation	Recommendation
pH < 5	Unstable; prone to rearrangement and degradation.[1]	Avoid.
pH 6-9	Generally stable for short-term use.[1]	Optimal pH range for reactions and short-term storage of working solutions.
Aqueous Solution (General)	Gradual loss of reactivity over time due to potential oxidation or hydration.[1]	Prepare fresh for each experiment.
Storage in Aqueous Buffer (4°C)	A DBCO-modified antibody showed a 3-5% loss of reactivity over 4 weeks.[2]	For short-term storage only. For longer periods, store frozen at -20°C or below.

Table 2: Solubility of DBCO-PEG3-C1-acid

Solvent	Solubility
Water	Limited, especially at acidic pH.
DMSO, DMF	Soluble.[1]

© 2026 BenchChem. All rights reserved.

Experimental Protocols

Protocol for Assessing the Aqueous Stability of **DBCO-PEG3-C1-acid** via HPLC

This protocol provides a method to quantify the stability of **DBCO-PEG3-C1-acid** in a specific aqueous buffer over time.

Objective: To determine the degradation rate of **DBCO-PEG3-C1-acid** in an aqueous solution by monitoring the decrease in the parent compound's peak area using reverse-phase high-performance liquid chromatography (RP-HPLC).

Materials:

- **DBCO-PEG3-C1-acid**
- Anhydrous DMSO or DMF
- Aqueous buffer of interest (e.g., PBS, pH 7.4)
- HPLC system with a C18 column and UV detector
- Mobile Phase A: 0.1% Trifluoroacetic acid (TFA) in water
- Mobile Phase B: 0.1% Acetonitrile with 0.1% TFA
- Thermostated incubator or water bath

Procedure:

- Preparation of Stock Solution: Prepare a concentrated stock solution of **DBCO-PEG3-C1-acid** (e.g., 10 mM) in anhydrous DMSO.
- Preparation of Working Solution: Dilute the stock solution into the aqueous buffer of interest to a final concentration suitable for HPLC analysis (e.g., 1 mM).
- Timepoint Zero (T=0) Analysis: Immediately after preparation, inject an aliquot of the working solution onto the HPLC system.

© 2026 BenchChem. All rights reserved.

- Incubation: Place the vial containing the remaining working solution in an incubator at the desired temperature (e.g., 4°C, 25°C, or 37°C).
- Timepoint Collection: At predetermined intervals (e.g., 1, 2, 4, 8, 24, 48 hours), withdraw an aliquot of the working solution and inject it onto the HPLC.
- HPLC Analysis:
  - Use a suitable gradient to separate the parent compound from any degradation products (e.g., a linear gradient from 5% to 95% Mobile Phase B over 20 minutes).
  - Monitor the elution profile at a wavelength where the DBCO group absorbs, typically around 309 nm.
- Data Analysis:
  - Identify the peak corresponding to the intact **DBCO-PEG3-C1-acid** in the chromatogram from T=0.
  - Measure the peak area of the intact compound at each time point.
  - Calculate the percentage of remaining **DBCO-PEG3-C1-acid** at each time point relative to the T=0 peak area.
  - Plot the percentage of the remaining compound against time to determine the stability profile under the tested conditions.

Visualizations

© 2026 BenchChem. All rights reserved.

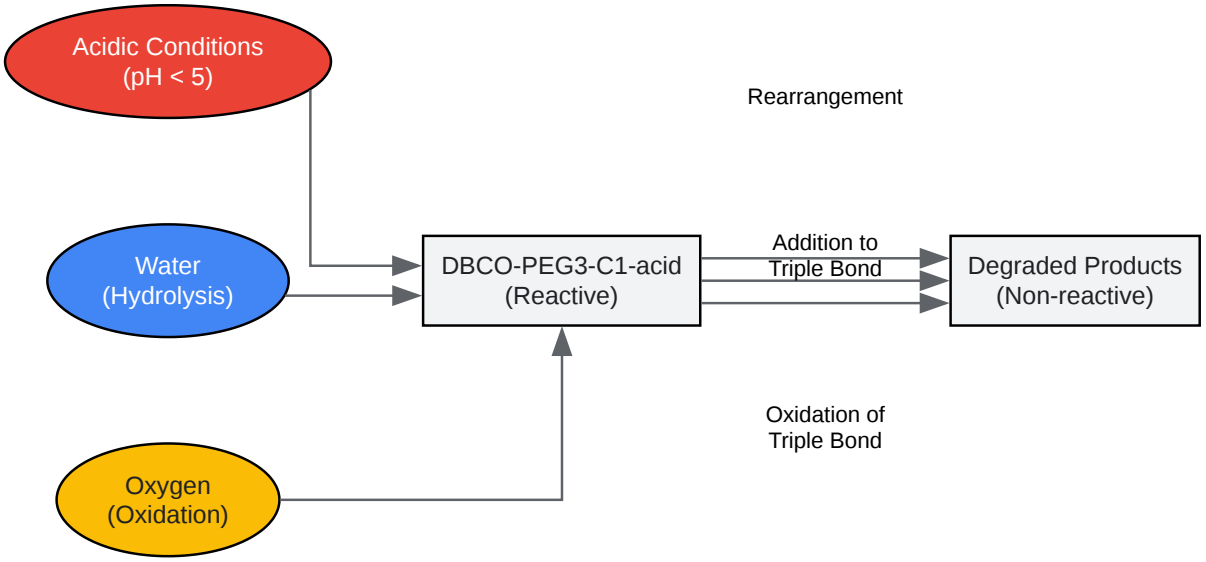

Click to download full resolution via product page

Caption: Potential degradation pathways of the DBCO moiety in aqueous solutions.

© 2026 BenchChem. All rights reserved.

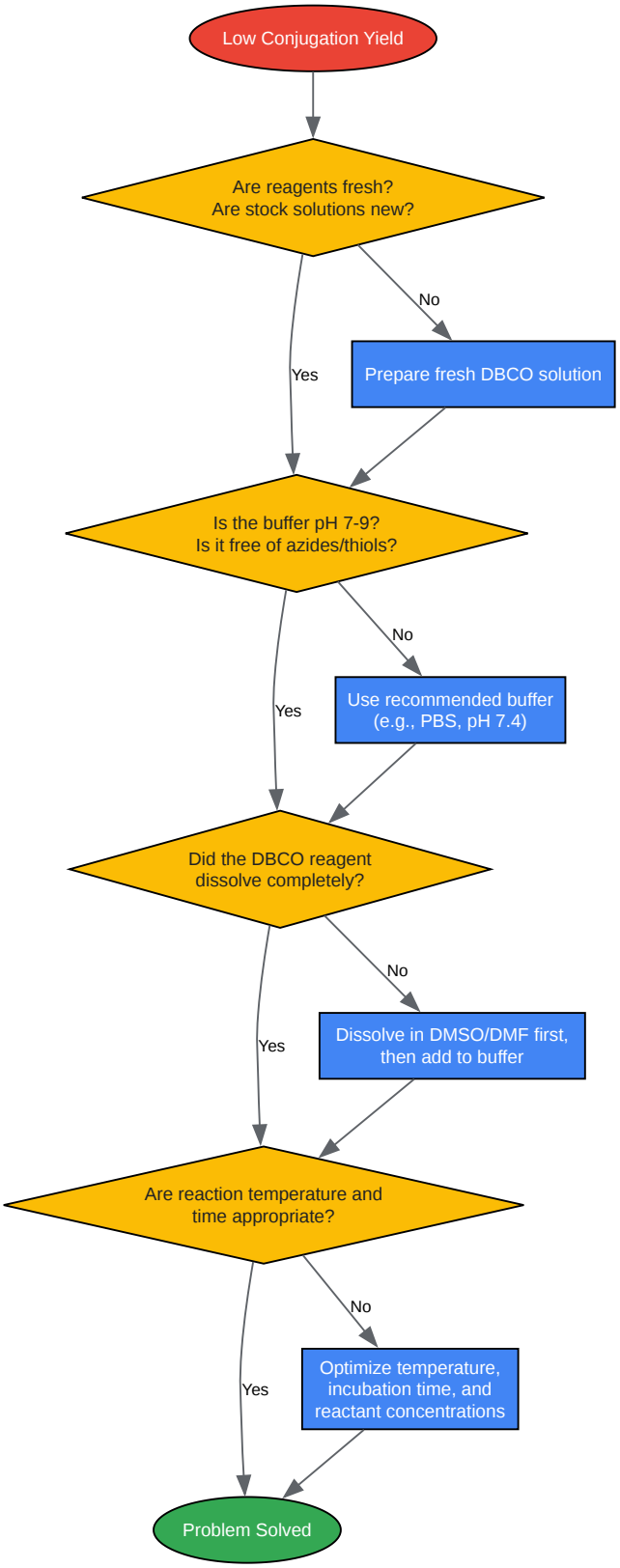

Click to download full resolution via product page

© 2026 BenchChem. All rights reserved.

Need Custom Synthesis?

BenchChem offers custom synthesis for rare earth carbides and specific isotopiclabeling.

Email: info@benchchem.com or Request Quote Online.

References

- 1. benchchem.com [benchchem.com]
- 2. interchim.fr [interchim.fr]
- 3. benchchem.com [benchchem.com]
- 4. benchchem.com [benchchem.com]

- To cite this document: BenchChem. [DBCO-PEG3-C1-acid stability in aqueous buffers]. BenchChem, [2026]. [Online PDF]. Available at: [https://www.benchchem.com/product/b15607025/docs#dbco-peg3-c1-acid-stability-in-aqueous-buffers]

Disclaimer & Data Validity:

The information provided in this document is for Research Use Only (RUO) and is strictly not intended for diagnostic or therapeutic procedures. While BenchChem strives to provide accurate protocols, we make no warranties, express or implied, regarding the fitness of this product for every specific experimental setup.

Technical Support: The protocols provided are for reference purposes. Unsure if this reagent suits your experiment?

Need Industrial/Bulk Grade? Request Custom Synthesis Quote

© 2026 BenchChem. All rights reserved.

BenchChem

Our mission is to be the trusted global source of essential and advanced chemicals, empowering scientists and researchers to drive progress in science and industry.

Contact

Address: 3281 E Guasti Rd

Ontario, CA 91761, United States

Phone: (601) 213-4426

Email: info@benchchem.com

Contact our Ph.D. Support Team for a compatibility check

© 2026 BenchChem. All rights reserved.