troubleshooting off-target effects of G-1 compound

Author: BenchChem Technical Support Team. **Date**: April 2026

Compound of Interest

Compound Name: *(3aS,4R,9bR)-G-1*

Cat. No.: *B15606099*

Get Quote

G-1 Compound Technical Support Center

Welcome to the technical support center for the G-1 compound. This resource is designed to assist researchers, scientists, and drug development professionals in troubleshooting experiments and understanding potential off-target effects of G-1.

Frequently Asked Questions (FAQs)

Q1: What is the primary mechanism of action of the G-1 compound?

G-1 is a selective agonist for the G protein-coupled estrogen receptor (GPER), also known as GPR30.[1][2] It binds to GPER with high affinity, initiating downstream signaling cascades.[3]

Q2: Is G-1 selective for GPER over classical estrogen receptors (ERα and ERβ)?

Yes, G-1 is highly selective for GPER and displays no significant binding activity at ERα and ERβ at concentrations up to 10 μM.[2][3]

Q3: What are the known downstream signaling pathways activated by G-1 through GPER?

GPER activation by G-1 can stimulate various downstream pathways, including:

© 2026 BenchChem. All rights reserved.

- MAPK/ERK Pathway: G-1 can induce the phosphorylation of ERK1/2.
- PI3K/Akt Pathway: G-1 can lead to the phosphorylation of Akt.
- Calcium Mobilization: G-1 can cause a rapid increase in intracellular calcium levels.[2][4]
- cAMP Production: G-1 can stimulate the production of intracellular cAMP.

Q4: What are the potential off-target effects of G-1?

Several studies have reported that G-1 can exert effects independent of GPER, particularly at higher concentrations. The most well-characterized off-target effect is the inhibition of tubulin polymerization, which can lead to cell cycle arrest and apoptosis.[2][5]

Q5: How can I differentiate between on-target GPER-mediated effects and off-target effects of G-1?

To distinguish between on-target and off-target effects, it is crucial to include proper experimental controls. These include:

- GPER Antagonists: Use of selective GPER antagonists like G15 or G36 to see if the observed effect of G-1 is blocked.[3][6][7]
- GPER Knockdown/Knockout: Employing siRNA to knockdown GPER expression or using GPER knockout cell lines/animal models.[6][8]
- GPER-negative cell lines: Testing the effect of G-1 in cell lines that do not express GPER.[6][8]

Troubleshooting Guide

Issue 1: Unexpected Inhibition of Cell Proliferation or Induction of Apoptosis

Question: I am observing significant inhibition of cell proliferation and/or induction of apoptosis in my cell line treated with G-1, but I am unsure if this is a GPER-mediated effect. How can I investigate this?

© 2026 BenchChem. All rights reserved.

Possible Causes and Solutions:

- GPER-Independent Off-Target Effects: G-1 has been shown to suppress cell proliferation and induce apoptosis in a GPER-independent manner in several cancer cell lines, including ovarian, breast, and glioblastoma cells.[3][6][8] This is often linked to its ability to inhibit tubulin polymerization.[2][5]

Troubleshooting Steps:

- Confirm GPER Expression: First, verify that your cell line expresses GPER using techniques like RT-qPCR or Western blotting.
- Use GPER Antagonists: Co-treat your cells with G-1 and a GPER antagonist (e.g., G15 or G36). If the inhibitory effect of G-1 persists in the presence of the antagonist, it is likely a GPER-independent off-target effect.[3][6]
- GPER siRNA Knockdown: Transfect your cells with siRNA targeting GPER to reduce its expression. If G-1 still inhibits proliferation or induces apoptosis in GPER-knockdown cells, this strongly suggests an off-target mechanism.[6][8]
- Test in GPER-Negative Cells: If available, use a cell line that does not express GPER as a negative control. If G-1 shows similar effects in these cells, it confirms a GPER-independent mechanism.[6][8]
- Tubulin Polymerization Assay: To directly test for effects on microtubule dynamics, perform an in vitro tubulin polymerization assay in the presence of G-1.

Issue 2: Inconsistent or Conflicting Downstream Signaling Results

Question: My Western blot results for downstream signaling proteins (e.g., p-ERK, p-Akt) after G-1 treatment are variable and difficult to interpret. What could be the cause?

Possible Causes and Solutions:

- Complex Signaling Crosstalk: GPER signaling can be complex and cell-type specific. The kinetics of phosphorylation events can be transient.

© 2026 BenchChem. All rights reserved.

- Off-Target Kinase Inhibition: While not as extensively documented for G-1 as for other compounds, off-target kinase inhibition is a possibility that can lead to unexpected signaling outcomes.
- Experimental Variability: Inconsistent cell density, passage number, or serum conditions can all contribute to variability in signaling experiments.

Troubleshooting Steps:

- Time-Course Experiment: Perform a time-course experiment to capture the peak phosphorylation of your target proteins. Activation can be rapid and transient.
- Dose-Response Analysis: Use a range of G-1 concentrations to establish a clear dose-response relationship for the signaling event.
- Control for GPER-Dependence: As with proliferation assays, use GPER antagonists or siRNA knockdown to confirm that the observed signaling is indeed mediated by GPER.[7]
- Standardize Experimental Conditions: Ensure consistency in cell seeding density, serum starvation protocols, and treatment times to minimize experimental variability.
- Kinase Profiling: If off-target kinase activity is suspected, consider performing a broad kinase inhibitor profiling assay to identify potential unintended targets of G-1.

Quantitative Data Summary

Table 1: Binding Affinity and Potency of G-1

© 2026 BenchChem. All rights reserved.

Parameter	Value	Receptor	Reference
Ki	11 nM	GPER	[3]
EC50 (Calcium Mobilization)	2 nM	GPER	[3]
IC50 (Migration Inhibition)	0.7 nM (SKBr3 cells)	GPER	[3]
IC50 (Migration Inhibition)	1.6 nM (MCF-7 cells)	GPER	[3]

Table 2: G-1 Effects on Cell Viability in Vulvar Carcinoma Cells

Cell Line	G-1 Concentration	% Cell Viability (Mean ± SEM)	p-value	Reference
A431	0.5 µM	93.72 ± 1.745	0.3809	[7]
A431	1.25 µM	64.4 ± 10.037	< 0.0001	[7]
A431	2.5 µM	13.05 ± 1.429	< 0.0001	[7]
A431	3.75 µM	3.167 ± 0.338	< 0.0001	[7]

Experimental Protocols

Protocol 1: Differentiating On-Target vs. Off-Target Effects using a GPER Antagonist

Objective: To determine if the observed effect of G-1 is mediated by GPER.

Materials:

- Cells of interest
- G-1 compound
- GPER antagonist (e.g., G36)

© 2026 BenchChem. All rights reserved.

- Appropriate cell culture medium and supplements
- Assay reagents for measuring the desired endpoint (e.g., cell viability, apoptosis)

Methodology:

- Cell Seeding: Plate cells at the desired density and allow them to adhere overnight.
- Pre-treatment with Antagonist: Pre-incubate one set of cells with the GPER antagonist G36 (e.g., 1-10 µM) for 30 minutes to 1 hour.
- G-1 Treatment: Add G-1 at the desired concentration to both antagonist-pre-treated and non-pre-treated cells. Include appropriate vehicle controls (e.g., DMSO) and an antagonist-only control.
- Incubation: Incubate the cells for the desired duration of the experiment.
- Endpoint Measurement: Perform the assay to measure your endpoint of interest (e.g., MTT assay for viability, Annexin V/PI staining for apoptosis).
- Data Analysis: Compare the effect of G-1 in the presence and absence of the GPER antagonist. If G36 blocks the effect of G-1, it is likely a GPER-mediated event. If the effect persists, it is likely off-target.[4]

Protocol 2: GPER Knockdown using siRNA

Objective: To confirm the role of GPER in mediating the effects of G-1.

Materials:

- Cells of interest
- GPER-specific siRNA and a non-targeting control siRNA
- Transfection reagent (e.g., Lipofectamine)
- Opti-MEM or other serum-free medium
- G-1 compound

© 2026 BenchChem. All rights reserved.

- Reagents for Western blotting or RT-qPCR to confirm knockdown efficiency

Methodology:

- siRNA Transfection: Transfect cells with GPER-specific siRNA or a non-targeting control siRNA according to the manufacturer's protocol for your chosen transfection reagent.
- Incubation: Incubate the cells for 24-72 hours to allow for GPER knockdown.
- Confirm Knockdown: Harvest a subset of cells to confirm GPER knockdown at the protein (Western blot) or mRNA (RT-qPCR) level.
- G-1 Treatment: Treat the remaining GPER-knockdown and control cells with G-1 at the desired concentration.
- Endpoint Measurement: After the desired treatment duration, perform your assay of interest.
- Data Analysis: Compare the effect of G-1 in GPER-knockdown cells to the control cells. A diminished or absent effect in the knockdown cells indicates a GPER-dependent mechanism. [6][8]

Protocol 3: In Vitro Tubulin Polymerization Assay

Objective: To directly assess the effect of G-1 on tubulin polymerization.

Materials:

- Purified tubulin protein
- Tubulin polymerization buffer
- GTP
- G-1 compound
- Positive control (e.g., colchicine)
- Negative control (e.g., paclitaxel, a polymerization promoter)

© 2026 BenchChem. All rights reserved.

- A fluorescence plate reader capable of reading at 340 nm excitation and 420 nm emission (for fluorescence-based assays) or a spectrophotometer for absorbance at 340 nm.

Methodology:

- Reaction Setup: In a 96-well plate, prepare reaction mixtures containing tubulin polymerization buffer, GTP, and purified tubulin.
- Compound Addition: Add G-1 at various concentrations to the reaction mixtures. Include vehicle, positive, and negative controls.
- Initiate Polymerization: Initiate tubulin polymerization by incubating the plate at 37°C.
- Monitor Polymerization: Monitor the change in fluorescence or absorbance over time. An increase in signal indicates tubulin polymerization.
- Data Analysis: Compare the rate and extent of tubulin polymerization in the presence of G-1 to the controls. Inhibition of polymerization by G-1 will result in a lower signal compared to the vehicle control.

Visualizations

© 2026 BenchChem. All rights reserved.

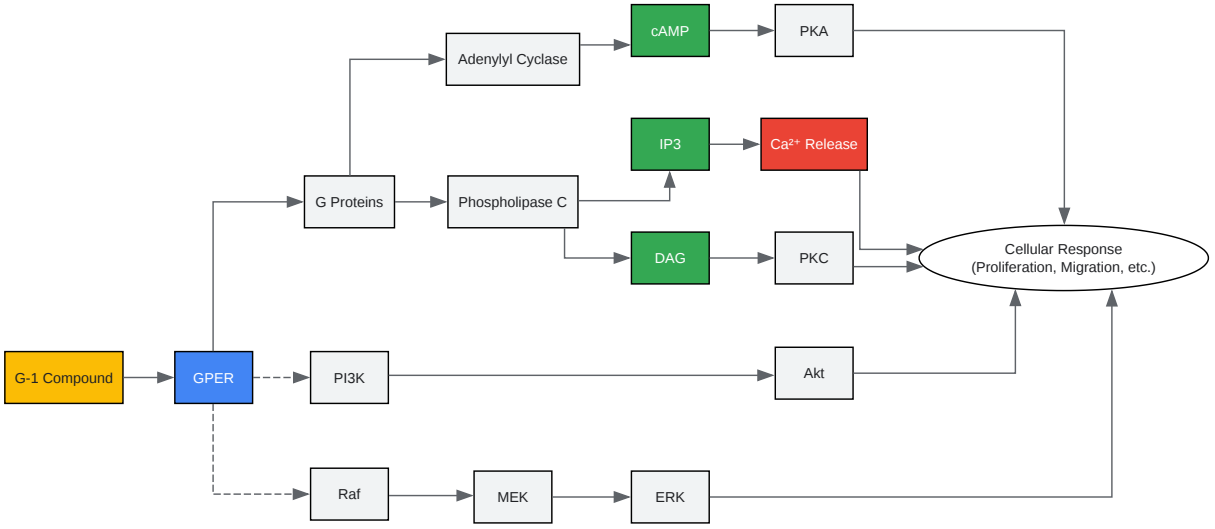

Click to download full resolution via product page

Caption: G-1 activated GPER signaling pathways.

© 2026 BenchChem. All rights reserved.

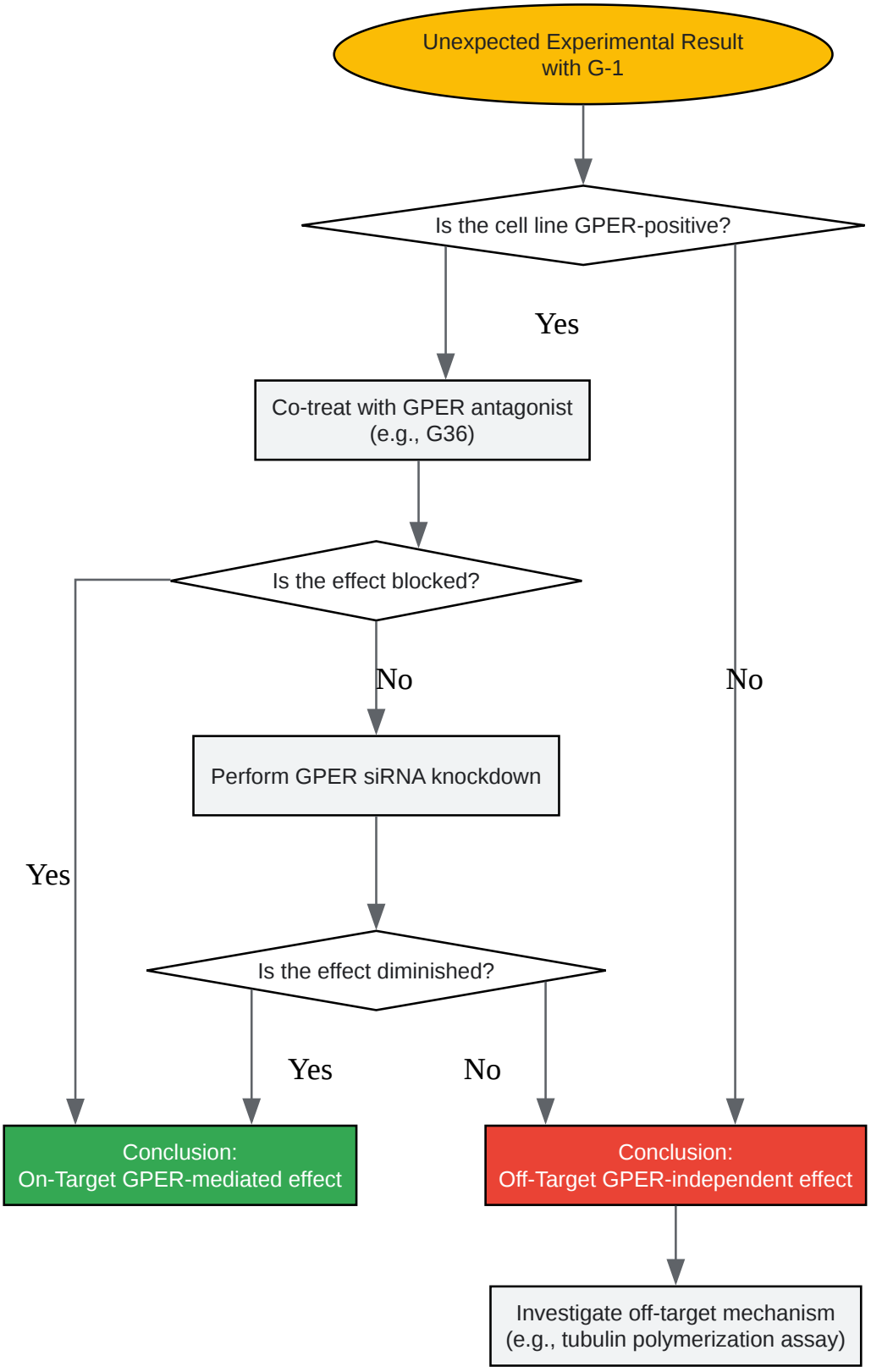

Click to download full resolution via product page

Caption: Workflow for troubleshooting G-1 off-target effects.

© 2026 BenchChem. All rights reserved.

Need Custom Synthesis?

BenchChem offers custom synthesis for rare earth carbides and specific isotopiclabeling.

Email: info@benchchem.com or Request Quote Online.

References

- 1. G-Protein-Coupled Estrogen Receptor (GPER)-Specific Agonist G1 Induces ER Stress Leading to Cell Death in MCF-7 Cells - PMC [pmc.ncbi.nlm.nih.gov]
- 2. The G-Protein–Coupled Estrogen Receptor Agonist G-1 Inhibits Proliferation and Causes Apoptosis in Leukemia Cell Lines of T Lineage - PMC [pmc.ncbi.nlm.nih.gov]
- 3. GPER Agonist G-1 Disrupts Tubulin Dynamics and Potentiates Temozolomide to Impair Glioblastoma Cell Proliferation - PMC [pmc.ncbi.nlm.nih.gov]
- 4. Frontiers | The G-Protein–Coupled Estrogen Receptor Agonist G-1 Inhibits Proliferation and Causes Apoptosis in Leukemia Cell Lines of T Lineage [frontiersin.org]
- 5. The G Protein-Coupled Estrogen Receptor (GPER): A Critical Therapeutic Target for Cancer - PMC [pmc.ncbi.nlm.nih.gov]
- 6. The putative G-protein coupled estrogen receptor agonist G-1 suppresses proliferation of ovarian and breast cancer cells in a GPER-independent manner - PMC [pmc.ncbi.nlm.nih.gov]
- 7. Identification of a GPER/GPR30 Antagonist with Improved Estrogen Receptor Counterselectivity - PMC [pmc.ncbi.nlm.nih.gov]
- 8. e-century.us [e-century.us]
- To cite this document: BenchChem. [troubleshooting off-target effects of G-1 compound]. BenchChem, [2026]. [Online PDF]. Available at: [https://www.benchchem.com/product/b15606099/docs#troubleshooting-off-target-effects-of-g-1-compound]

Disclaimer & Data Validity:

The information provided in this document is for Research Use Only (RUO) and is strictly not intended for diagnostic or therapeutic procedures. While BenchChem strives to provide accurate protocols, we make no warranties, express or implied, regarding the fitness of this product for every specific experimental setup.

Technical Support: The protocols provided are for reference purposes. Unsure if this reagent suits your experiment?

Need Industrial/Bulk Grade? Request Custom Synthesis Quote

BenchChem

Our mission is to be the trusted global source of essential and advanced chemicals, empowering scientists and researchers to drive progress in science and industry.

Contact

Address: 3281 E Guasti Rd

Ontario, CA 91761, United States

Phone: (601) 213-4426

Email: info@benchchem.com

Contact our Ph.D. Support Team for a compatibility check

© 2026 BenchChem. All rights reserved.