Optimizing CWHM-12 concentration for cell culture

Author: BenchChem Technical Support Team. **Date**: April 2026

Compound of Interest

Compound Name: *CWHM-12*

Cat. No.: *B15606198*

Get Quote

CWHM-12 Technical Support Center

This technical support center provides detailed troubleshooting guides, frequently asked questions (FAQs), and experimental protocols for researchers, scientists, and drug development professionals using **CWHM-12**.

Mechanism of Action

CWHM-12 is a potent, small-molecule antagonist of αV (alpha-V) integrins.[1][2][3] It is a synthetic organic compound designed as an RGD peptidomimetic that selectively inhibits multiple αV integrin subtypes, including αvβ1, αvβ3, αvβ5, αvβ6, and αvβ8, with IC50 values in the low nanomolar to sub-nanomolar range.[1][4] By blocking these integrins, **CWHM-12** effectively inhibits the activation of Transforming Growth Factor-Beta (TGF-β), a key signaling pathway involved in fibrosis and cell proliferation.[1][5] This mechanism makes **CWHM-12** a valuable tool for studying and potentially treating fibrotic diseases in organs such as the liver, lungs, and pancreas.[2][4]

Signaling Pathway Diagram

© 2026 BenchChem. All rights reserved.

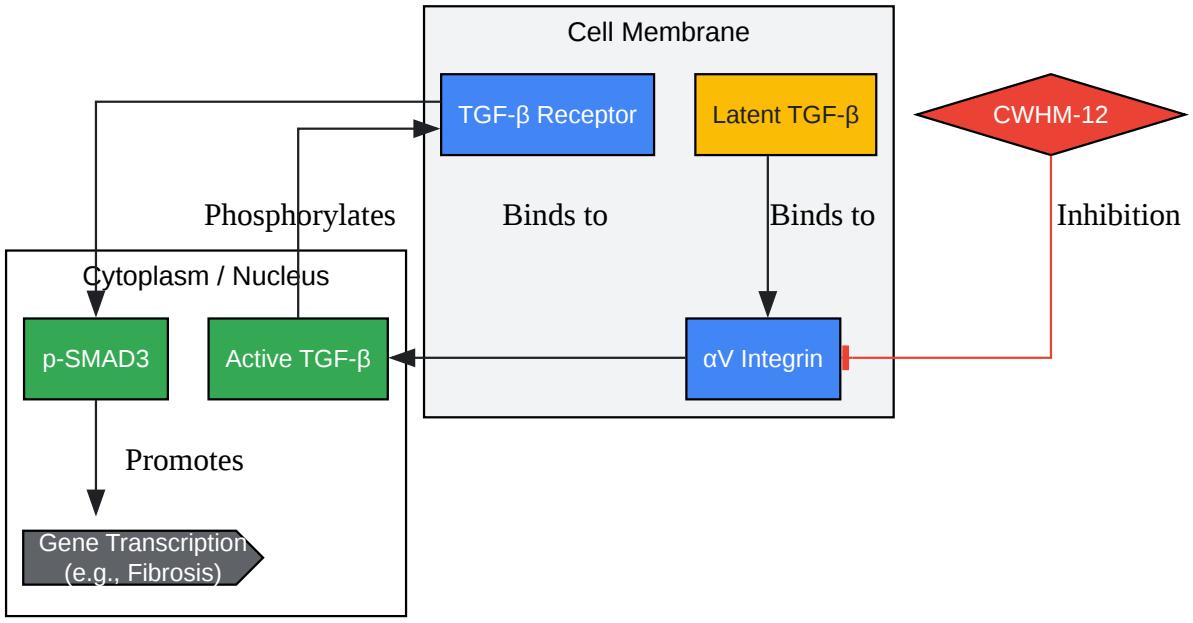

Click to download full resolution via product page

Caption: **CWHM-12** inhibits αV integrins, preventing TGF-β activation.

Frequently Asked Questions (FAQs)

Q1: What is the recommended starting concentration for **CWHM-12** in cell culture?

A1: The optimal concentration of **CWHM-12** is highly dependent on the cell line and experimental endpoint. Based on its high potency, a good starting point for a dose-response experiment is a wide concentration range, from 0.1 nM to 1000 nM.[1] For initial experiments, testing concentrations around the reported IC50 values for the specific integrin subtypes relevant to your cell model is recommended.[1][4]

Q2: How should I prepare and store **CWHM-12** stock solutions?

A2: Most small molecule inhibitors are dissolved in an organic solvent like DMSO to create a high-concentration stock solution (e.g., 10 mM).[6] Store this stock solution in small aliquots at -20°C or -80°C to prevent repeated freeze-thaw cycles.[6][7] When preparing your working concentrations, dilute the stock solution in your cell culture medium, ensuring the final DMSO

© 2026 BenchChem. All rights reserved.

concentration does not exceed a level toxic to your cells (typically <0.5%).[6] Always include a vehicle-only control (medium with the same final DMSO concentration) in your experiments.[7]

Q3: How can I confirm that **CWHM-12** is inhibiting its target in my cells?

A3: Target engagement can be confirmed by measuring the phosphorylation of downstream signaling molecules. Since **CWHM-12** inhibits TGF-β activation, a common method is to perform a Western blot to detect the levels of phosphorylated SMAD3 (p-SMAD3), a key downstream effector.[1] A reduction in p-SMAD3 levels upon **CWHM-12** treatment would indicate successful target inhibition.

Q4: What are the essential control experiments to include when using **CWHM-12**?

A4: To ensure the validity of your results, the following controls are critical:

- Vehicle Control: Treat cells with the same concentration of the solvent (e.g., DMSO) used to dissolve **CWHM-12**. This controls for any effects of the solvent itself.[7]
- Untreated Control: Cells that receive no treatment, representing the baseline response.
- Positive Control (if applicable): A known activator of the TGF-β pathway (like recombinant TGF-β) can be used to ensure the pathway is active in your cell system.
- Dose-Response: Use a range of **CWHM-12** concentrations to understand the potency and identify potential toxicity at higher doses.[8]

Troubleshooting Guide

© 2026 BenchChem. All rights reserved.

Issue	Potential Cause(s)	Recommended Solution(s)
High Cell Death or Toxicity	1. Concentration is too high: The concentration used may be significantly above the IC50, leading to off-target effects.[7] 2. Solvent Toxicity: The final concentration of the solvent (e.g., DMSO) may be too high for the specific cell line.[6][7] 3. Prolonged Exposure: Continuous exposure may be toxic.	1. Perform a dose-response curve to determine the optimal non-toxic concentration. Start with a much lower concentration range.[7] 2. Ensure the final solvent concentration is non-toxic (typically <0.5% for DMSO). Run a solvent-only control to verify.[6] 3. Reduce the incubation time. Determine the minimum time required to observe the desired effect.
No Observable Effect on Target	1. Concentration is too low: The concentration may not be sufficient to inhibit the target integrins in your specific cell model. 2. Inhibitor Degradation: The compound may be unstable in the culture medium or may have degraded due to improper storage.[6] 3. Low Target Expression: The cell line may not express the relevant αV integrin subtypes at a high enough level.	1. Increase the concentration. Perform a dose-response experiment to find the effective range.[8] 2. Prepare fresh dilutions from a properly stored stock solution for each experiment. Avoid repeated freeze-thaw cycles.[7] 3. Verify target expression using techniques like Western blot, flow cytometry, or qPCR before starting the experiment.
Inconsistent Results Between Experiments	1. Cell Culture Variability: Differences in cell passage number, confluency, or overall health can affect the response.[9] 2. Inhibitor Preparation: Inconsistent pipetting or errors in serial dilutions.[9] 3. Precipitation: The inhibitor may	1. Maintain consistent cell culture practices. Use cells within a defined passage number range and seed at a consistent density.[9] 2. Use calibrated pipettes and be meticulous when preparing dilutions. Prepare a master mix

© 2026 BenchChem. All rights reserved.

	be precipitating out of the solution at the working concentration.	for treating replicate wells. 3. Visually inspect the medium for any precipitate after adding CWHM-12. If solubility is an issue, try preparing the dilution in pre-warmed medium and vortexing gently.

Quantitative Data Summary

The following table summarizes the reported half-maximal inhibitory concentrations (IC50) of **CWHM-12** for various αV integrin subtypes.

Integrin Subtype	IC50 (nM)
αvβ8	0.2[1]
αvβ3	0.8[1]
αvβ6	1.5[1]
αvβ1	1.8[1]
αvβ5	61[1]

Experimental Protocols & Workflows

Protocol 1: Determining the IC50 of **CWHM-12** via Cell Viability Assay

This protocol outlines the steps to determine the concentration of **CWHM-12** that inhibits cell viability by 50% using a standard MTT or similar colorimetric assay.[10][11]

Workflow Diagram:

© 2026 BenchChem. All rights reserved.

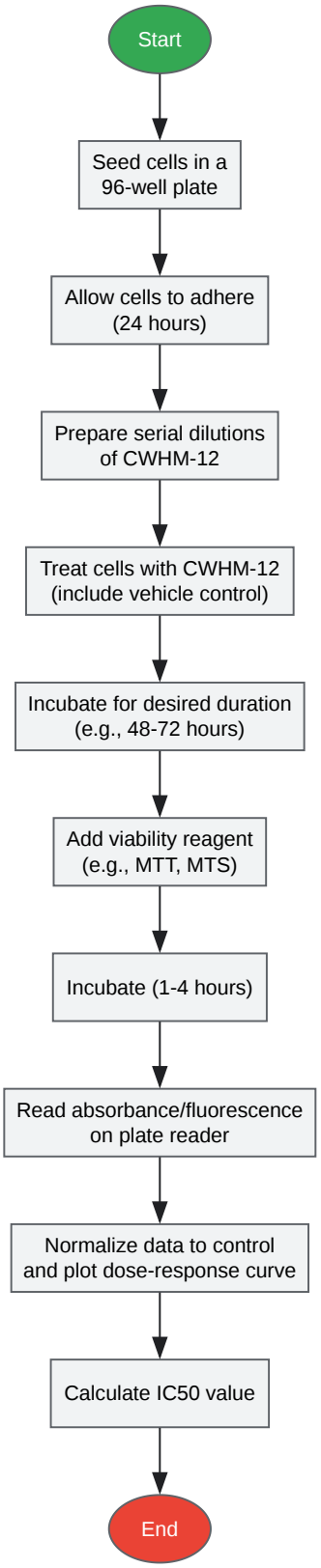

Click to download full resolution via product page

Caption: Workflow for determining the IC50 value of **CWHM-12**.

© 2026 BenchChem. All rights reserved.

Methodology:

- Cell Seeding: Plate your cells in a 96-well plate at a predetermined optimal density and allow them to adhere for 24 hours.[11][12]
- Compound Preparation: Prepare a 2X serial dilution series of **CWHM-12** in complete culture medium. A typical range could be from 2000 nM down to 0.1 nM. Also, prepare a 2X vehicle control (e.g., 0.2% DMSO).
- Cell Treatment: Remove the old medium from the cells and add 100 µL of the appropriate **CWHM-12** dilution or vehicle control to each well.
- Incubation: Incubate the plate for a duration relevant to your experiment (e.g., 48 or 72 hours).[11]
- Viability Assay: Add the viability reagent (e.g., 10 µL of 5 mg/mL MTT) to each well and incubate for 1-4 hours at 37°C.[10][13]
- Readout: If using MTT, solubilize the formazan crystals with 100 µL of DMSO and read the absorbance at ~570 nm.[11]
- Data Analysis: Convert absorbance values to percentage viability relative to the vehicle control. Plot the percent viability against the log of the **CWHM-12** concentration and use non-linear regression (sigmoidal dose-response) to calculate the IC50 value.[11][14]

Protocol 2: Verifying Target Inhibition via Western Blot

This protocol details how to confirm **CWHM-12**'s effect on the TGF-β pathway by measuring p-SMAD3 levels.

Troubleshooting Logic Diagram:

© 2026 BenchChem. All rights reserved.

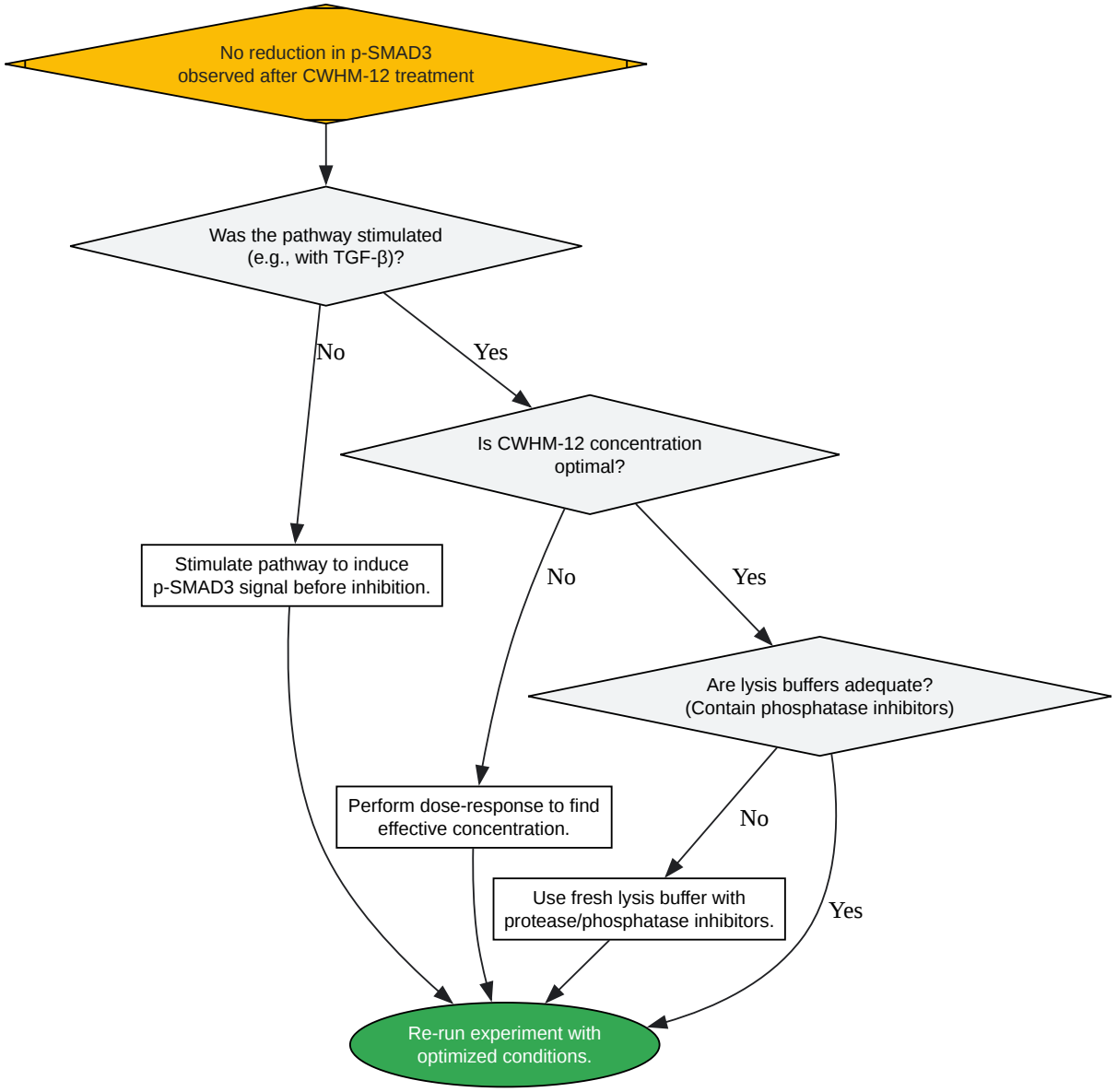

Click to download full resolution via product page

Caption: Troubleshooting logic for Western blot experiments.

© 2026 BenchChem. All rights reserved.

Methodology:

- Cell Culture and Treatment: Plate cells in 6-well plates.[12] Once they reach 70-80% confluency, serum-starve them for 4-6 hours if necessary. Pre-treat with desired concentrations of **CWHM-12** (and a vehicle control) for 1-2 hours.[9]
- Stimulation (Optional but Recommended): Stimulate the cells with a known activator like recombinant TGF-β (e.g., 5 ng/mL) for 30-60 minutes to induce a strong p-SMAD3 signal.
- Protein Lysate Preparation: Immediately after treatment, place plates on ice, wash cells twice with ice-cold PBS, and add 100 µL of ice-cold RIPA lysis buffer containing protease and phosphatase inhibitors to each well.[9][12] Scrape and collect the lysate.
- Quantification: Determine the protein concentration of each lysate using a BCA or Bradford assay.[12]
- SDS-PAGE and Transfer: Load equal amounts of protein (e.g., 20-30 µg) per lane on an SDS-PAGE gel. Transfer the separated proteins to a PVDF or nitrocellulose membrane.[9][15]
- Antibody Incubation:
  - Block the membrane with 5% BSA or non-fat milk in TBST for 1 hour.[16]
  - Incubate with a primary antibody against p-SMAD3 overnight at 4°C.
  - Wash and incubate with an HRP-conjugated secondary antibody for 1 hour at room temperature.[9]
- Detection: Detect the signal using an ECL substrate and an imaging system.[9]
- Stripping and Re-probing: To normalize the data, strip the membrane and re-probe with an antibody for total SMAD3 and a loading control like β-actin or GAPDH.[17]

Need Custom Synthesis?

BenchChem offers custom synthesis for rare earth carbides and specific isotopiclabeling.

Email: info@benchchem.com or Request Quote Online.

References

- 1. medchemexpress.com [medchemexpress.com]
- 2. medkoo.com [medkoo.com]
- 3. CWHM12 | Ligand page | IUPHAR/BPS Guide to PHARMACOLOGY [guidetopharmacology.org]
- 4. caymanchem.com [caymanchem.com]
- 5. CWHM-12, an Antagonist of Integrin-Mediated Transforming Growth Factor-Beta Activation Confers Protection During Early Mycobacterium tuberculosis Infection in Mice - PMC [pmc.ncbi.nlm.nih.gov]
- 6. benchchem.com [benchchem.com]
- 7. benchchem.com [benchchem.com]
- 8. benchchem.com [benchchem.com]
- 9. benchchem.com [benchchem.com]
- 10. Protocol for Determining the IC50 of Drugs on Adherent Cells Using MTT Assay - Creative Bioarray | Creative Bioarray [creative-bioarray.com]
- 11. benchchem.com [benchchem.com]
- 12. benchchem.com [benchchem.com]
- 13. Cell Viability Assays - Assay Guidance Manual - NCBI Bookshelf [ncbi.nlm.nih.gov]
- 14. clyte.tech [clyte.tech]
- 15. assaygenie.com [assaygenie.com]
- 16. Western blot protocol | Abcam [abcam.com]
- 17. m.youtube.com [m.youtube.com]

- To cite this document: BenchChem. [Optimizing CWHM-12 concentration for cell culture]. BenchChem, [2026]. [Online PDF]. Available at: [https://www.benchchem.com/product/b15606198/docs#optimizing-cwhm-12-concentration-for-cell-culture]

Disclaimer & Data Validity:

The information provided in this document is for Research Use Only (RUO) and is strictly not intended for diagnostic or therapeutic procedures. While BenchChem strives to provide

accurate protocols, we make no warranties, express or implied, regarding the fitness of this product for every specific experimental setup.

Technical Support: The protocols provided are for reference purposes. Unsure if this reagent suits your experiment?

Need Industrial/Bulk Grade? Request Custom Synthesis Quote

BenchChem

Our mission is to be the trusted global source of essential and advanced chemicals, empowering scientists and researchers to drive progress in science and industry.

Contact

Address: 3281 E Guasti Rd

Ontario, CA 91761, United States

Phone: (601) 213-4426

Email: info@benchchem.com

Contact our Ph.D. Support Team for a compatibility check

© 2026 BenchChem. All rights reserved.