Pharmacological Properties of A-779: A Technical Guide

Author: BenchChem Technical Support Team. **Date**: April 2026

Compound of Interest

Compound Name: *A 779*

Cat. No.: *B15605931*

Get Quote

For Researchers, Scientists, and Drug Development Professionals

Introduction

A-779 is a potent and selective antagonist of the Mas receptor, a G-protein coupled receptor that serves as the endogenous receptor for Angiotensin-(1-7)[1][2][3][4][5]. As a critical tool for elucidating the physiological and pathological roles of the ACE2/Ang-(1-7)/Mas axis, A-779 has been instrumental in a wide range of preclinical studies. This technical guide provides a comprehensive overview of the pharmacological properties of A-779, including its binding characteristics, mechanism of action, and effects on key signaling pathways. Detailed experimental protocols and structured data tables are presented to facilitate its application in research and drug development.

Core Pharmacological Properties

A-779 is a non-peptide antagonist that selectively binds to the Mas receptor, thereby blocking the downstream effects of Angiotensin-(1-7). Its high affinity and selectivity make it an invaluable tool for distinguishing the actions of the Ang-(1-7)/Mas axis from those of the classical Renin-Angiotensin System (RAS) mediated by the AT1 and AT2 receptors.

© 2026 BenchChem. All rights reserved.

Data Presentation: Quantitative Pharmacological Data

The following tables summarize the key quantitative data for A-779 from various in vitro and in vivo studies.

Table 1: Receptor Binding Affinity of A-779

Parameter	Value	Species/System	Reference
IC50	0.3 nM	CHO cells transfected with the Mas receptor, competing with 125I-Ang-(1-7)	[2]
Affinity for AT1 Receptor	No significant affinity	Concentration of 1 µM	[4][5]
Affinity for AT2 Receptor	No significant affinity	Concentration of 1 µM	[4][5]

Table 2: In Vivo Dosage and Administration of A-779

Species	Dosage	Route of Administration	Experimental Model	Reference
Rat	400 ng/kg/min	Subcutaneous infusion	Ovariectomized (OVX) rat model of bone loss	[3]
Rat	10 nmol/kg/min	Intravenous infusion	Euglycemic insulin clamp	[6]
Rat	100 and 300 ng/kg/min	Infusion	Renal ischemia/reperfusion	[7]

Mechanism of Action and Signaling Pathways

© 2026 BenchChem. All rights reserved.

A-779 exerts its effects by competitively inhibiting the binding of Angiotensin-(1-7) to the Mas receptor. This blockade prevents the activation of downstream signaling cascades that are typically initiated by Ang-(1-7). The Ang-(1-7)/Mas axis is known to modulate several key intracellular signaling pathways, and A-779 has been shown to reverse these effects.

Key Signaling Pathways Modulated by A-779

- Extracellular Signal-Regulated Kinase (ERK1/2): Ang-(1-7) has been shown to influence ERK1/2 phosphorylation. A-779 can block these Ang-(1-7)-mediated effects on ERK1/2 activation[1].
- Protein Kinase B (Akt): The PI3K/Akt pathway is another target of the Ang-(1-7)/Mas axis. A-779 has been used to demonstrate the involvement of the Mas receptor in Akt phosphorylation[8].
- p38 Mitogen-Activated Protein Kinase (p38 MAPK): A-779 can be used to investigate the role of the Ang-(1-7)/Mas axis in modulating p38 MAPK signaling, which is involved in inflammation and cellular stress responses[9].
- Nuclear Factor-kappa B (NF-κB): The NF-κB pathway, a critical regulator of inflammation, can be influenced by Ang-(1-7). A-779 is effective in blocking these effects, highlighting the anti-inflammatory potential of targeting the Mas receptor[9].

Signaling Pathway Diagram

© 2026 BenchChem. All rights reserved.

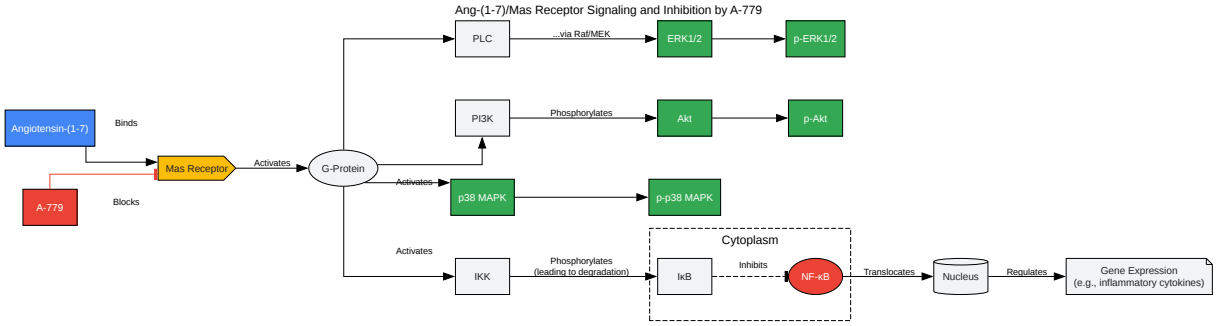

Click to download full resolution via product page

Ang-(1-7)/Mas Receptor Signaling Pathways and A-779 Inhibition.

Experimental Protocols

This section provides detailed methodologies for key experiments involving A-779.

Radioligand Binding Assay

This protocol is for a competitive radioligand binding assay to determine the affinity of A-779 for the Mas receptor.

© 2026 BenchChem. All rights reserved.

Radioligand Binding Assay Workflow

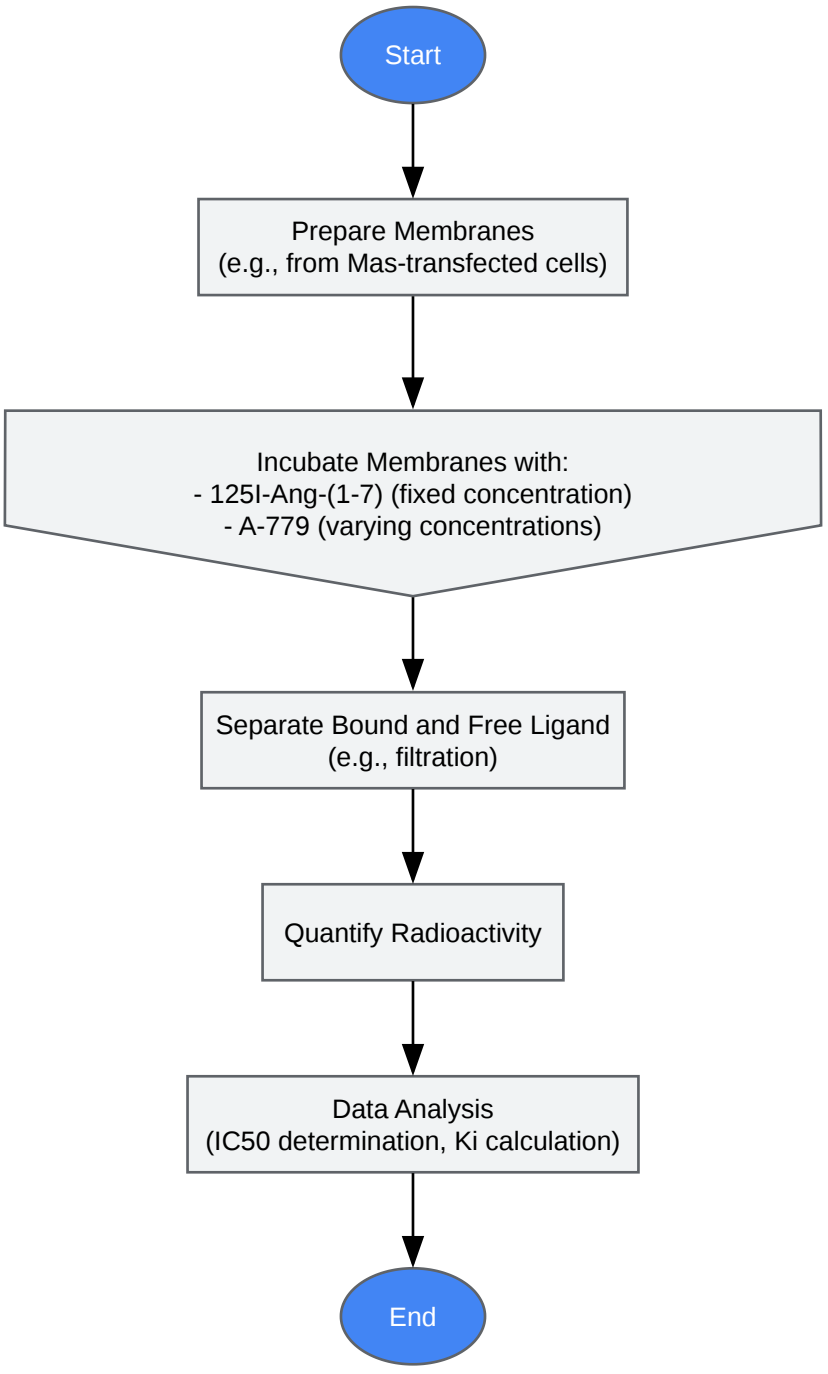

Click to download full resolution via product page

Workflow for a competitive radioligand binding assay.

Methodology:

- Membrane Preparation:

© 2026 BenchChem. All rights reserved.

- Homogenize cells or tissues expressing the Mas receptor in a cold lysis buffer (e.g., 50mM Tris-HCl, 5 mM MgCl2, 5 mM EDTA, with protease inhibitors).
- Centrifuge the homogenate to pellet the membranes.
- Wash the membrane pellet and resuspend in a suitable assay buffer.
- Determine the protein concentration of the membrane preparation.

- Binding Assay:
  - In a 96-well plate, add the membrane preparation, a fixed concentration of radiolabeled Angiotensin-(1-7) (e.g., 125I-Ang-(1-7)), and varying concentrations of A-779.
  - Incubate the plate at a controlled temperature (e.g., 37°C) for a sufficient time to reach equilibrium (e.g., 60 minutes).
  - Non-specific binding is determined in the presence of a high concentration of unlabeled Ang-(1-7).
- Separation and Quantification:
  - Rapidly filter the contents of each well through a glass fiber filter to separate bound from free radioligand.
  - Wash the filters with ice-cold wash buffer to remove unbound radioactivity.
  - Quantify the radioactivity retained on the filters using a scintillation counter.
- Data Analysis:
  - Plot the percentage of specific binding against the logarithm of the A-779 concentration.
  - Fit the data to a sigmoidal dose-response curve to determine the IC50 value.
  - Calculate the inhibitor constant (Ki) using the Cheng-Prusoff equation: Ki = IC50 / (1 + [L]/Kd), where [L] is the concentration of the radioligand and Kd is its dissociation constant.

© 2026 BenchChem. All rights reserved.

Western Blot for Phosphorylated Kinases (ERK1/2, Akt, p38 MAPK)

This protocol outlines the general procedure for detecting changes in the phosphorylation status of key signaling kinases in response to Ang-(1-7) and A-779.

© 2026 BenchChem. All rights reserved.

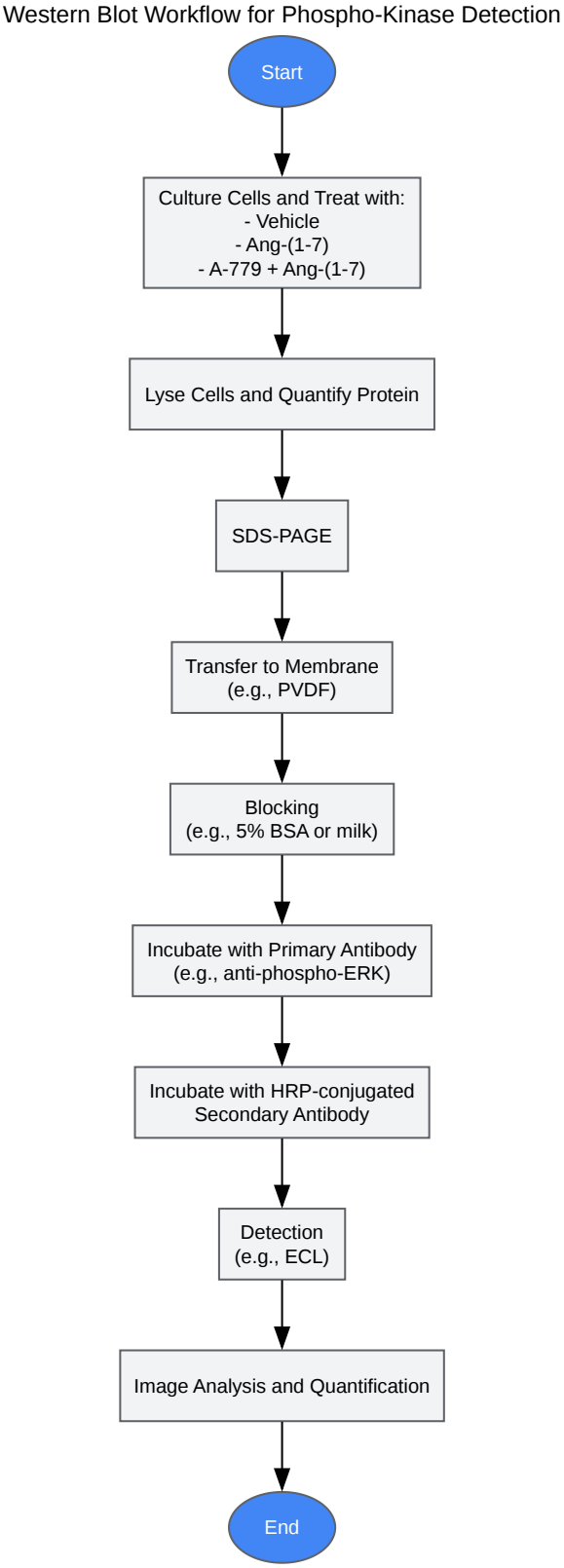

Click to download full resolution via product page

Workflow for Western blot analysis of phosphorylated kinases.

© 2026 BenchChem. All rights reserved.

Methodology:

- Cell Treatment and Lysis:
  - Culture cells to the desired confluency and serum-starve overnight.
  - Pre-treat cells with A-779 or vehicle for a specified time (e.g., 30 minutes) before stimulating with Ang-(1-7) for various time points.
  - Lyse the cells in a lysis buffer containing protease and phosphatase inhibitors.
  - Determine the protein concentration of the lysates.
- SDS-PAGE and Transfer:
  - Separate equal amounts of protein from each sample by SDS-polyacrylamide gel electrophoresis (SDS-PAGE).
  - Transfer the separated proteins to a polyvinylidene difluoride (PVDF) or nitrocellulose membrane.
- Immunoblotting:
  - Block the membrane with a blocking solution (e.g., 5% non-fat dry milk or bovine serum albumin in Tris-buffered saline with Tween 20) to prevent non-specific antibody binding.
  - Incubate the membrane with a primary antibody specific for the phosphorylated form of the kinase of interest (e.g., anti-phospho-ERK1/2).
  - Wash the membrane and then incubate with a horseradish peroxidase (HRP)-conjugated secondary antibody.
- Detection and Analysis:
  - Detect the signal using an enhanced chemiluminescence (ECL) substrate and imaging system.

© 2026 BenchChem. All rights reserved.

- To normalize for protein loading, strip the membrane and re-probe with an antibody against the total (non-phosphorylated) form of the kinase or a housekeeping protein (e.g., GAPDH or β-actin).
- Quantify the band intensities using densitometry software.

NF-κB Activation Assay

This protocol describes a method to assess the effect of A-779 on Ang-(1-7)-mediated NF-κB activation by measuring the nuclear translocation of the p65 subunit.

Methodology:

- Cell Treatment:
  - Culture cells and pre-treat with A-779 or vehicle before stimulation with Ang-(1-7) or a known NF-κB activator (e.g., TNF-α) as a positive control.
- Nuclear and Cytoplasmic Fractionation:
  - Harvest the cells and perform subcellular fractionation to separate the nuclear and cytoplasmic extracts using a commercially available kit or standard biochemical procedures.
- Western Blot for p65:
  - Perform Western blotting on both the nuclear and cytoplasmic fractions as described in the previous protocol.
  - Use a primary antibody specific for the p65 subunit of NF-κB.
  - Use antibodies against markers for the nuclear (e.g., Lamin B1) and cytoplasmic (e.g., GAPDH) fractions to confirm the purity of the extracts.
- Data Analysis:
  - Quantify the band intensity of p65 in the nuclear and cytoplasmic fractions.

© 2026 BenchChem. All rights reserved.

- An increase in the nuclear-to-cytoplasmic ratio of p65 indicates NF-κB activation.

Conclusion

A-779 is a well-characterized and highly selective antagonist of the Mas receptor. Its utility in dissecting the complex signaling pathways of the Angiotensin-(1-7)/Mas axis is invaluable for research in cardiovascular disease, inflammation, and a growing number of other therapeutic areas. The data and protocols provided in this guide are intended to support the effective use of A-779 in advancing our understanding of this important physiological system.

Need Custom Synthesis?

BenchChem offers custom synthesis for rare earth carbides and specific isotopiclabeling.

Email: info@benchchem.com or Request Quote Online.

References

- 1. giffordbioscience.com [giffordbioscience.com]
- 2. researchgate.net [researchgate.net]
- 3. sigmaaldrich.com [sigmaaldrich.com]
- 4. The principle and method of Western blotting (WB) | MBL Life Sience -GLOBAL- [mblbio.com]
- 5. derangedphysiology.com [derangedphysiology.com]
- 6. researchgate.net [researchgate.net]
- 7. biorxiv.org [biorxiv.org]
- 8. Radioligand binding methods: practical guide and tips - PubMed [pubmed.ncbi.nlm.nih.gov]
- 9. Real-time monitoring of NF-kappaB activity in cultured cells and in animal models - PMC [pmc.ncbi.nlm.nih.gov]
- To cite this document: BenchChem. [Pharmacological Properties of A-779: A Technical Guide]. BenchChem, [2026]. [Online PDF]. Available at: [https://www.benchchem.com/product/b15605931/docs#pharmacological-properties-of-a-779-a-technical-guide]

© 2026 BenchChem. All rights reserved.

Disclaimer & Data Validity:

The information provided in this document is for Research Use Only (RUO) and is strictly not intended for diagnostic or therapeutic procedures. While BenchChem strives to provide accurate protocols, we make no warranties, express or implied, regarding the fitness of this product for every specific experimental setup.

Technical Support: The protocols provided are for reference purposes. Unsure if this reagent suits your experiment?

Need Industrial/Bulk Grade? Request Custom Synthesis Quote

BenchChem

Our mission is to be the trusted global source of essential and advanced chemicals, empowering scientists and researchers to drive progress in science and industry.

Contact

Address: 3281 E Guasti Rd

Ontario, CA 91761, United States

Phone: (601) 213-4426

Email: info@benchchem.com

Contact our Ph.D. Support Team for a compatibility check

© 2026 BenchChem. All rights reserved.