Investigating Novel Substrates of CC-885 Based Degraders: An In-depth Technical Guide

Author: BenchChem Technical Support Team. **Date**: April 2026

Compound of Interest

Compound Name:	*CC-885-CH2-Peg1-NH-CH3*
CAS No.:	*2722698-03-3*
Cat. No.:	*B15605986*

Get Quote

For Researchers, Scientists, and Drug Development Professionals

This technical guide provides a comprehensive overview of the landscape of substrates targeted by the Cereblon E3 ligase modulator (CELMoD) CC-885. Beyond its well-established role in degrading GSPT1, emerging research has identified a portfolio of novel substrates, expanding the potential therapeutic applications of this molecular glue degrader. This document details the established and novel substrates of CC-885, provides structured quantitative data for easy comparison, outlines detailed experimental protocols for substrate validation, and visualizes the key signaling pathways and experimental workflows.

Introduction to CC-885 and Neosubstrate Degradation

CC-885 is a small molecule that functions as a "molecular glue," bringing the E3 ubiquitin ligase Cereblon (CRBN) into proximity with proteins that it would not typically interact with. This induced proximity leads to the ubiquitination and subsequent proteasomal degradation of these "neosubstrates." The most well-characterized substrate of CC-885 is the translation termination factor GSPT1.[1] However, recent studies have revealed that CC-885 can also induce the

© 2026 BenchChem. All rights reserved.

degradation of other proteins, opening up new avenues for therapeutic intervention in various diseases, particularly cancer.

Known and Novel Substrates of CC-885

The expanding list of CC-885 substrates highlights its pleiotropic effects and potential for broader therapeutic applications.

GSPT1: The Canonical Substrate

GSPT1 (G1 to S phase transition 1) is a key factor in the termination of protein synthesis.[2] Its degradation by CC-885 leads to translational readthrough of stop codons, causing cellular stress and apoptosis, particularly in cancer cells with high rates of protein synthesis.[3][4]

Novel Substrates of CC-885

Recent research has identified several novel substrates of CC-885, each with distinct roles in cellular processes relevant to cancer biology.

- Polo-like Kinase 1 (PLK1): A critical regulator of mitosis, PLK1 is often overexpressed in cancer and is a validated oncology target. CC-885 has been shown to induce the degradation of PLK1 in a CRBN-dependent manner.[5][6]
- Cyclin-Dependent Kinase 4 (CDK4): A key driver of cell cycle progression, CDK4 is a central player in the G1/S transition. CC-885 can induce the ubiquitination and degradation of CDK4 in multiple myeloma cells.[7]
- BNIP3L/NIX: This protein is involved in mitophagy, the selective degradation of mitochondria. CC-885-mediated degradation of BNIP3L suggests a potential role for this degrader in modulating mitochondrial homeostasis and sensitizing cancer cells to mitochondria-targeting drugs.[8][9]
- GOLM1 (Golgi membrane protein 1): Overexpressed in several cancers, GOLM1 is implicated in cell migration and invasion. CC-885 has been found to promote the degradation of GOLM1 in hepatocellular carcinoma cells.[10]

Quantitative Data Summary

© 2026 BenchChem. All rights reserved.

The following tables summarize the key quantitative parameters for the degradation of various CC-885 substrates, providing a basis for comparative analysis.

Substrate	Cell Line(s)	DC_{50} (nM)	D_{max} (%)	Time Point (h)	Reference
GSPT1	MV4-11	2.1	>90	24	[11]
GSPT1	MM1.S	~10	>90	6	[12]
PLK1	A549, NCI-H1299	Not specified	Not specified	24	[5]
CDK4	MM1.S, U266	Not specified	Not specified	Not specified	[7]
BNIP3L	A549	Not specified	~60	24	[8]
GOLM1	Huh7, HepG2	Not specified	Not specified	Not specified	[10]

Table 1: Degradation Potency and Efficacy of CC-885 Against Various Substrates. DC_{50} (Degradation Concentration 50) is the concentration of CC-885 required to degrade 50% of the target protein. D_{max} is the maximum percentage of protein degradation observed.

© 2026 BenchChem. All rights reserved.

Substrate	Cell Line	IC_{50} (nM)	Time Point (h)	Reference
GSPT1-dependent	MV4-11	0.2	72	[13]
GSPT1-dependent	Various AML cell lines	1 - 1000	48/72	[13][14]
PLK1-synergy	A549	Synergistic with Volasertib	Not specified	[5]
CDK4-dependent	MM1.S, U266	~100 - 1000	Not specified	[7]
BNIP3L-synergy	AML cells	Enhances Rotenone sensitivity	Not specified	[8]
GOLM1-dependent	Huh7, HepG2	Not specified	Not specified	[10]

Table 2: Anti-proliferative Activity of CC-885 in Relation to Substrate Degradation. IC_{50} is the concentration of CC-885 that inhibits cell proliferation by 50%.

Experimental Protocols

This section provides detailed methodologies for key experiments used to identify and validate novel substrates of CC-885.

Identification of Novel Substrates by Immunoprecipitation-Mass Spectrometry (IP-MS)

This protocol describes a general workflow for identifying proteins that interact with CRBN in a CC-885-dependent manner.

- Cell Culture and Treatment: Culture cells (e.g., A549) to 70-80% confluency. Treat cells with either DMSO (vehicle control) or CC-885 at a final concentration of 1 µM for 4-6 hours.
- Cell Lysis: Wash cells with ice-cold PBS and lyse in a suitable lysis buffer (e.g., RIPA buffer) supplemented with protease and phosphatase inhibitors.

© 2026 BenchChem. All rights reserved.

- Immunoprecipitation:
  - Pre-clear cell lysates by incubating with Protein A/G agarose beads.
  - Incubate the pre-cleared lysates with an anti-CRBN antibody or an isotype control antibody overnight at 4°C with gentle rotation.
  - Add Protein A/G agarose beads and incubate for another 2-4 hours.
- Washing: Pellet the beads by centrifugation and wash them three to five times with lysis buffer to remove non-specific binding proteins.
- Elution: Elute the protein complexes from the beads using an appropriate elution buffer (e.g., low pH glycine buffer or SDS-PAGE sample buffer).
- Sample Preparation for Mass Spectrometry:
  - Perform in-gel or in-solution trypsin digestion of the eluted proteins.
  - Desalt the resulting peptides using C18 spin columns.
- LC-MS/MS Analysis: Analyze the peptide samples by liquid chromatography-tandem mass spectrometry (LC-MS/MS).
- Data Analysis: Identify and quantify the proteins in each sample using a proteomics software suite (e.g., MaxQuant). Compare the protein abundance between the CC-885-treated and DMSO-treated samples to identify proteins that are significantly enriched in the CC-885-treated CRBN immunoprecipitates.

Validation of Substrate Degradation by Western Blot

This protocol details the quantification of protein degradation to determine DC_{50} and D_{max} values.[15][16][17]

- Cell Seeding and Treatment: Seed cells in a multi-well plate at a density that allows for logarithmic growth during the experiment. Allow cells to adhere overnight. Treat cells with a serial dilution of CC-885 (e.g., 0.1 nM to 10 µM) and a vehicle control (DMSO) for a specified time course (e.g., 4, 8, 16, 24 hours).

© 2026 BenchChem. All rights reserved.

- Cell Lysis: Harvest cells and prepare whole-cell lysates as described in the IP-MS protocol.
- Protein Quantification: Determine the protein concentration of each lysate using a BCA or Bradford assay.
- SDS-PAGE and Western Blotting:
  - Normalize the protein amounts for all samples and prepare them for SDS-PAGE by adding Laemmli buffer and boiling.
  - Separate the proteins by SDS-PAGE and transfer them to a PVDF or nitrocellulose membrane.
- Immunoblotting:
  - Block the membrane with a suitable blocking buffer (e.g., 5% non-fat milk or BSA in TBST).
  - Incubate the membrane with a primary antibody specific for the target substrate overnight at 4°C.
  - Incubate with a primary antibody against a loading control (e.g., GAPDH, β-actin, or Vinculin) to ensure equal protein loading.
  - Wash the membrane and incubate with the appropriate HRP-conjugated secondary antibody.
- Detection and Quantification:
  - Detect the protein bands using a chemiluminescence substrate and an imaging system.
  - Quantify the band intensities using densitometry software (e.g., ImageJ).
- Data Analysis:
  - Normalize the intensity of the target protein band to the corresponding loading control band.

© 2026 BenchChem. All rights reserved.

- Calculate the percentage of remaining protein relative to the vehicle-treated control.
- Plot the percentage of degradation versus the log of the CC-885 concentration and fit the data to a dose-response curve to determine the DC_{50} and D_{max} values.

Assessment of Cellular Viability

This protocol outlines a common method to assess the cytotoxic effects of CC-885.[14][18][19]

- Cell Seeding: Seed cells in a 96-well plate at an appropriate density.
- Compound Treatment: The following day, treat the cells with a serial dilution of CC-885 and a vehicle control.
- Incubation: Incubate the plates for a specified period (e.g., 72 hours) at 37°C in a humidified incubator.
- Viability Assay:
  - Use a commercially available cell viability reagent such as CellTiter-Glo® (Promega) or MTT.
  - For CellTiter-Glo®, add the reagent directly to the wells, incubate, and measure luminescence using a plate reader.
  - For MTT, add the MTT reagent, incubate to allow for formazan crystal formation, solubilize the crystals with a solubilization solution, and measure the absorbance at the appropriate wavelength.
- Data Analysis:
  - Normalize the viability data to the vehicle-treated control wells.
  - Plot the percentage of cell viability versus the log of the CC-885 concentration and fit the data to a dose-response curve to determine the IC_{50} value.

Signaling Pathways and Experimental Workflows

© 2026 BenchChem. All rights reserved.

The following diagrams, generated using the DOT language for Graphviz, illustrate key signaling pathways affected by the degradation of CC-885 substrates and a typical experimental workflow for novel substrate discovery.

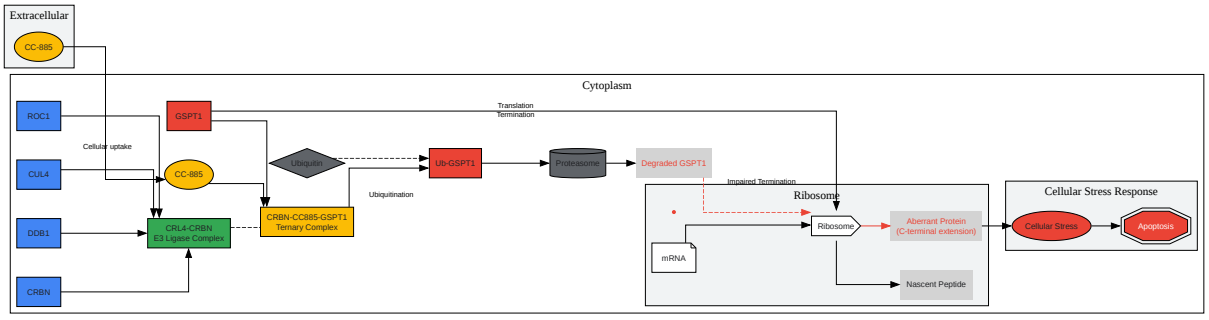

Click to download full resolution via product page

Caption: GSPT1 degradation pathway induced by CC-885.

© 2026 BenchChem. All rights reserved.

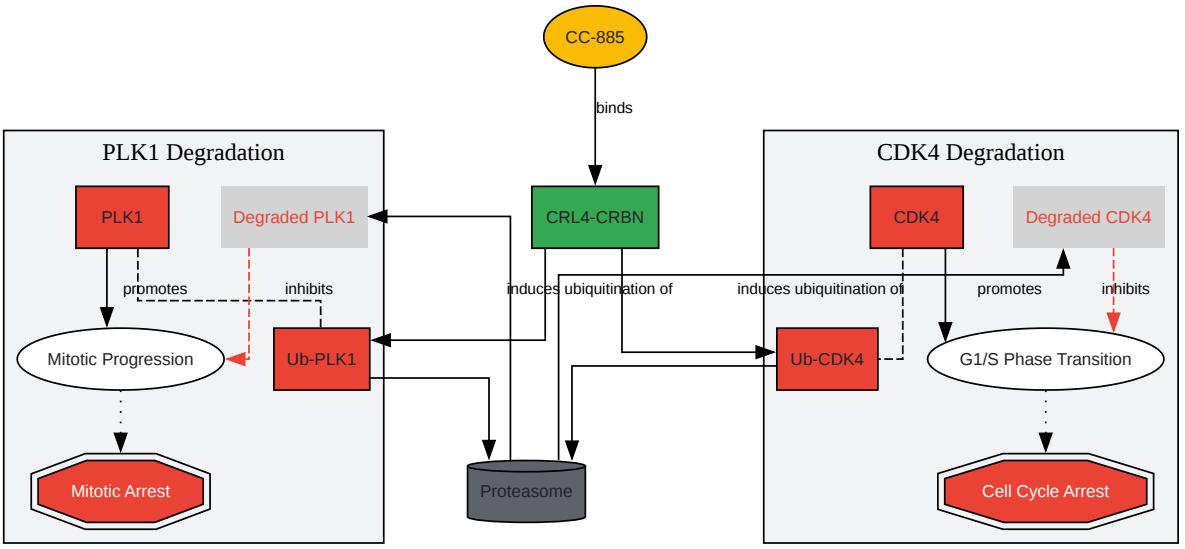

Click to download full resolution via product page

Caption: Signaling impact of PLK1 and CDK4 degradation.

© 2026 BenchChem. All rights reserved.

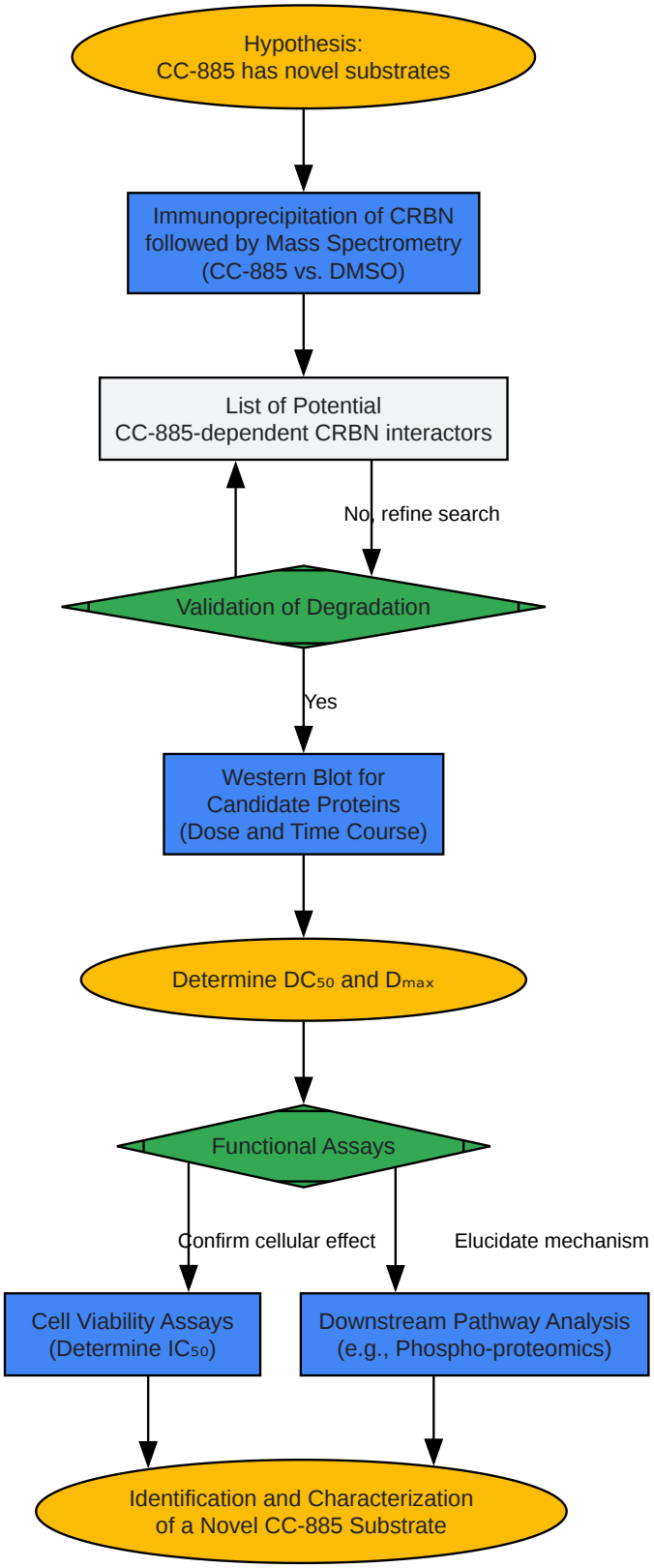

Click to download full resolution via product page

Caption: Workflow for novel substrate discovery.

© 2026 BenchChem. All rights reserved.

Conclusion

The expanding repertoire of CC-885 substrates underscores the complexity and therapeutic potential of this molecular glue degrader. While GSPT1 remains a key target, the identification of novel substrates such as PLK1, CDK4, BNIP3L, and GOLM1 opens exciting new possibilities for targeting critical cancer dependencies. The methodologies and data presented in this guide provide a framework for researchers to further investigate the mechanisms of CC-885 and to explore its application in diverse therapeutic contexts. Continued research in this area will be crucial for fully realizing the clinical potential of CC-885 and other next-generation CELMoDs.

Need Custom Synthesis?

BenchChem offers custom synthesis for rare earth carbides and specific isotopiclabeling.

Email: info@benchchem.com or Request Quote Online.

References

- 1. Proteomic analysis reveals a PLK1-dependent G2/M degradation program and a role for AKAP2 in coordinating the mitotic cytoskeleton - PMC [pmc.ncbi.nlm.nih.gov]
- 2. benchchem.com [benchchem.com]
- 3. Degradation of GSPT1 causes TP53-independent cell death in leukemia whilst sparing normal hematopoietic stem cells. | Broad Institute [broadinstitute.org]
- 4. discovery.ucl.ac.uk [discovery.ucl.ac.uk]
- 5. A Cereblon Modulator CC-885 Induces CRBN- and p97-Dependent PLK1 Degradation and Synergizes with Volasertib to Suppress Lung Cancer - PubMed [pubmed.ncbi.nlm.nih.gov]
- 6. researchgate.net [researchgate.net]
- 7. Cereblon modulator CC-885 induces CRBN-dependent ubiquitination and degradation of CDK4 in multiple myeloma - PubMed [pubmed.ncbi.nlm.nih.gov]
- 8. The novel cereblon modulator CC-885 inhibits mitophagy via selective degradation of BNIP3L - PubMed [pubmed.ncbi.nlm.nih.gov]
- 9. researchgate.net [researchgate.net]

© 2026 BenchChem. All rights reserved.

- 10. Targeted degradation of GOLM1 by CC-885 via CRL4-CRBN E3 ligase inhibits hepatocellular carcinoma progression - PubMed [pubmed.ncbi.nlm.nih.gov]
- 11. pubs.acs.org [pubs.acs.org]
- 12. Selective Degradation of GSPT1 by Cereblon Modulators Identified via a Focused Combinatorial Library - PMC [pmc.ncbi.nlm.nih.gov]
- 13. medchemexpress.com [medchemexpress.com]
- 14. file.medchemexpress.com [file.medchemexpress.com]
- 15. benchchem.com [benchchem.com]
- 16. The Simple Way to Targeted Protein Degradation Analysis | Bio-Techne [bio-techne.com]
- 17. Western blot protocol | Abcam [abcam.com]
- 18. Cell Viability Assays - Assay Guidance Manual - NCBI Bookshelf [ncbi.nlm.nih.gov]
- 19. researchgate.net [researchgate.net]

- To cite this document: BenchChem. [Investigating Novel Substrates of CC-885 Based Degraders: An In-depth Technical Guide]. BenchChem, [2026]. [Online PDF]. Available at: [https://www.benchchem.com/product/b15605986/docs#investigating-novel-substrates-of-cc-885-based-degraders-an-in-depth-technical-guide]

Disclaimer & Data Validity:

The information provided in this document is for Research Use Only (RUO) and is strictly not intended for diagnostic or therapeutic procedures. While BenchChem strives to provide accurate protocols, we make no warranties, express or implied, regarding the fitness of this product for every specific experimental setup.

Technical Support: The protocols provided are for reference purposes. Unsure if this reagent suits your experiment?

Need Industrial/Bulk Grade? Request Custom Synthesis Quote

BenchChem

Our mission is to be the trusted global source of essential and advanced chemicals, empowering scientists and researchers to drive progress in science and industry.

Contact

Address: 3281 E Guasti Rd

Ontario, CA 91761, United States

Phone: (601) 213-4426

Email: info@benchchem.com

Contact our Ph.D. Support Team for a compatibility check

© 2026 BenchChem. All rights reserved.