# Application Notes and Protocols for In Vitro Cytotoxicity Assays of ETN029

**Author**: BenchChem Technical Support Team. **Date**: April 2026

***Compound of Interest***

| | |
|---|---|
| *Compound Name:* | *ETN029* |
| *Cat. No.:* | *B15604173* |

*Get Quote*

For Researchers, Scientists, and Drug Development Professionals

## Introduction

**ETN029** is a novel macrocyclic peptide designed to target Delta-like ligand 3 (DLL3), a protein selectively expressed on the surface of neuroendocrine neoplasms such as small cell lung cancer (SCLC) and neuroendocrine prostate cancer (NEPC).[1] As a radioligand therapy agent, **ETN029** can be chelated with therapeutic radioisotopes like Actinium-225 (225Ac) to specifically deliver cytotoxic radiation to tumor cells.[2][3] This document provides detailed protocols for assessing the in vitro cytotoxicity of **ETN029**, a critical step in the preclinical evaluation of this targeted therapeutic. The described assays are fundamental for determining the dose-dependent efficacy of **ETN029** and understanding its mechanism of action.

## Data Presentation

The following table summarizes hypothetical quantitative data for the cytotoxicity of 225Ac-labeled **ETN029** against various DLL3-expressing cancer cell lines. This data is for illustrative purposes to demonstrate the recommended format for data presentation.

© 2026 BenchChem. All rights reserved.

| Cell Line | Cancer Type | Assay | Endpoint | Incubation Time (h) | $IC_{50}$ (nM) | Max. Inhibition (%) |
|---|---|---|---|---|---|---|
| SHP-77 | Small Cell Lung Cancer | MTT | Viability | 72 | 1.5 | 95.2 |
| NCI-H69 | Small Cell Lung Cancer | LDH | Cytotoxicity | 72 | 2.1 | 88.7 |
| CT26.DLL3 | DLL3-expressing Colon Carcinoma | Annexin V/PI | Apoptosis | 48 | 1.8 | 92.5 (Early+Late) |
| CT26.WT | Wild-Type Colon Carcinoma (DLL3-negative) | MTT | Viability | 72 | >1000 | <10 |

# Experimental Protocols

## MTT Cell Viability Assay

This protocol describes a colorimetric assay to measure the reduction in cell viability upon treatment with **ETN029**. The assay is based on the reduction of the yellow tetrazolium salt MTT (3-(4,5-dimethylthiazol-2-yl)-2,5-diphenyltetrazolium bromide) to purple formazan crystals by metabolically active cells.[4]

Materials:

- DLL3-expressing target cancer cell lines (e.g., SHP-77)
- Complete cell culture medium (e.g., RPMI-1640 with 10% FBS)
- **ETN029** (radiolabeled with 225Ac for cytotoxic activity)

© 2026 BenchChem. All rights reserved.

- Phosphate-Buffered Saline (PBS)
- MTT solution (5 mg/mL in PBS)
- Solubilization solution (e.g., DMSO or 0.01 M HCl in 10% SDS solution)
- 96-well microplates
- Microplate reader

Procedure:

- Seed cells in a 96-well plate at a density of 5,000-10,000 cells/well and incubate for 24 hours at 37°C in a 5% $CO_2$ humidified atmosphere.
- Prepare serial dilutions of 225Ac-**ETN029** in complete culture medium.
- Remove the existing medium from the cells and add 100 µL of the compound dilutions to the respective wells. Include vehicle-only controls.
- Incubate the plate for 72 hours at 37°C in a 5% $CO_2$ humidified atmosphere.
- After incubation, add 10 µL of MTT solution to each well and incubate for another 4 hours.
- Carefully remove the medium and add 100 µL of solubilization solution to each well to dissolve the formazan crystals.
- Measure the absorbance at 570 nm using a microplate reader.
- Calculate cell viability as a percentage of the vehicle-treated control.

## LDH Cytotoxicity Assay

This assay quantifies cytotoxicity by measuring the activity of lactate dehydrogenase (LDH) released from the cytosol of damaged cells into the culture medium.[4][5]

Materials:

- DLL3-expressing target cancer cell lines

© 2026 BenchChem. All rights reserved.

- Complete cell culture medium
- **ETN029** (radiolabeled with 225Ac)
- LDH assay kit (commercially available)
- 96-well microplates
- Microplate reader

Procedure:

- Follow steps 1-4 of the MTT assay protocol.
- After the 72-hour incubation, centrifuge the plate at 250 x g for 5 minutes.
- Carefully transfer 50 µL of the supernatant from each well to a new 96-well plate.
- Add 50 µL of the LDH assay reaction mixture to each well.
- Incubate the plate for 30 minutes at room temperature, protected from light.
- Measure the absorbance at 490 nm using a microplate reader.
- Determine the percentage of cytotoxicity relative to a maximum LDH release control (cells treated with a lysis buffer).

## Annexin V/PI Apoptosis Assay

This flow cytometry-based assay differentiates between viable, early apoptotic, late apoptotic, and necrotic cells.[4]

Materials:

- DLL3-expressing target cancer cell lines
- Complete cell culture medium
- **ETN029** (radiolabeled with 225Ac)

© 2026 BenchChem. All rights reserved.

- Annexin V-FITC (or other fluorochrome)
- Propidium Iodide (PI) staining solution
- 1X Binding Buffer
- Phosphate-Buffered Saline (PBS)
- Flow cytometer

Procedure:

- Seed cells in 6-well plates and treat with 225Ac-**ETN029** for the desired time (e.g., 48 hours).
- Harvest the cells (including any floating cells in the medium) and wash with cold PBS.
- Resuspend the cell pellet in 1X Binding Buffer to a concentration of approximately 1 x $10^6$ cells/mL.
- Transfer 100 µL of the cell suspension to a flow cytometry tube.
- Add 5 µL of Annexin V-FITC and 5 µL of PI staining solution.
- Gently vortex the tubes and incubate for 15 minutes at room temperature in the dark.
- Add 400 µL of 1X Binding Buffer to each tube.
- Analyze the samples by flow cytometry within one hour. Use unstained, Annexin V-only, and PI-only stained cells as controls to set up compensation and quadrants.

# Visualizations

## ETN029 Experimental Workflow

© 2026 BenchChem. All rights reserved.

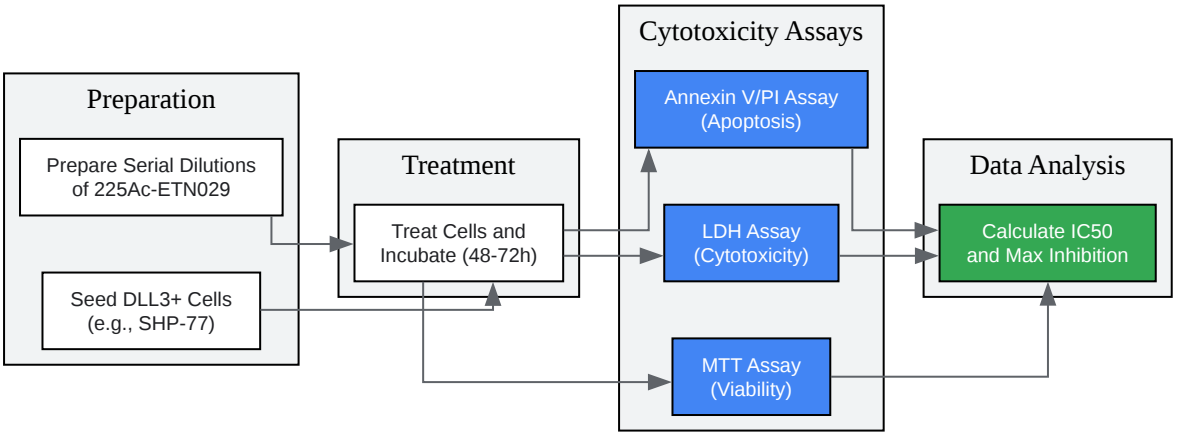


Click to download full resolution via product page

Caption: Workflow for in vitro cytotoxicity assessment of **ETN029**.

## Proposed Signaling Pathway of **ETN029**

© 2026 BenchChem. All rights reserved.

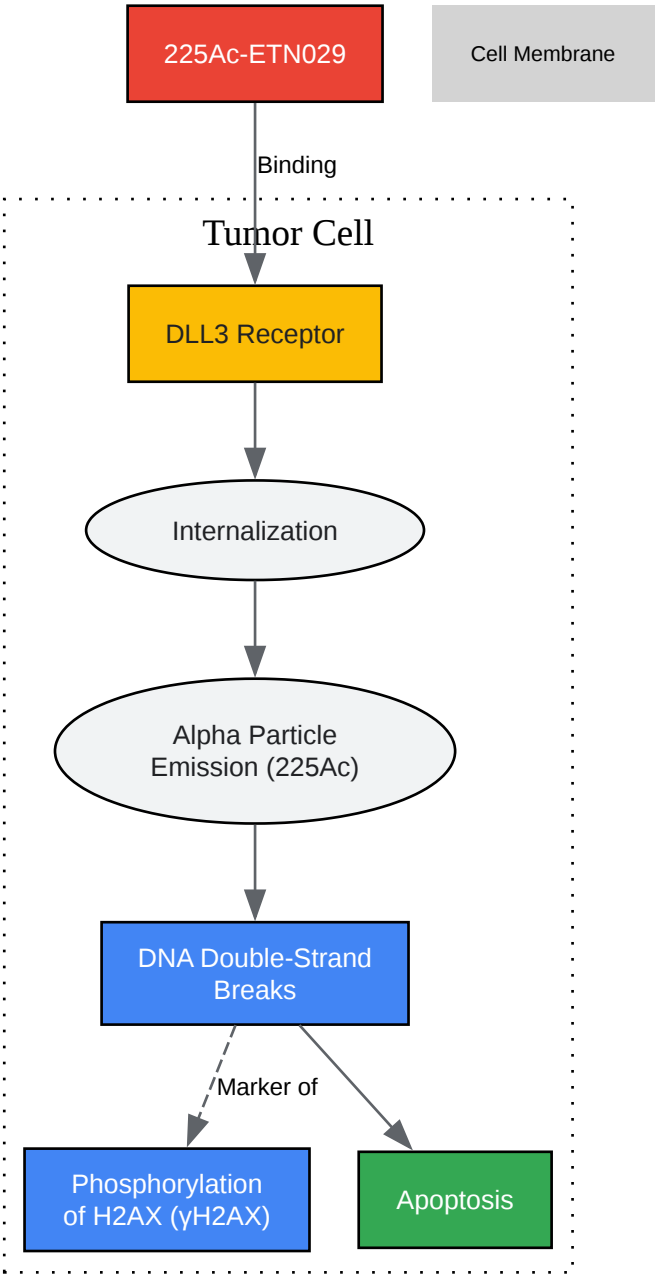


Click to download full resolution via product page

***Need Custom Synthesis?***

*BenchChem offers custom synthesis for rare earth carbides and specific isotopiclabeling.*

*Email: info@benchchem.com or Request Quote Online.*

# References

© 2026 BenchChem. All rights reserved.

- 1. ETN029: Discovery and development of a DLL3-targeting radioligand therapy for the treatment of SCLC and beyond - American Chemical Society [acs.digitellinc.com]
- 2. medchemexpress.com [medchemexpress.com]
- 3. ETN029 | Ligand page | IUPHAR/BPS Guide to PHARMACOLOGY [guidetopharmacology.org]
- 4. What are the commonly used methods for measuring cytotoxicity? | AAT Bioquest [aatbio.com]
- 5. Cytotoxicity Assays: In Vitro Methods to Measure Dead Cells - Assay Guidance Manual - NCBI Bookshelf [ncbi.nlm.nih.gov]



- To cite this document: BenchChem. [Application Notes and Protocols for In Vitro Cytotoxicity Assays of ETN029]. BenchChem, [2026]. [Online PDF]. Available at: [https://www.benchchem.com/product/b15604173/docs#application-notes-and-protocols-for-in-vitro-cytotoxicity-assays-of-etn029]


---

**Disclaimer & Data Validity:**

The information provided in this document is for Research Use Only (RUO) and is strictly not intended for diagnostic or therapeutic procedures. While BenchChem strives to provide accurate protocols, we make no warranties, express or implied, regarding the fitness of this product for every specific experimental setup.

**Technical Support:**The protocols provided are for reference purposes. Unsure if this reagent suits your experiment?

**Need Industrial/Bulk Grade?** Request Custom Synthesis Quote


# BenchChem

Our mission is to be the trusted global source of essential and advanced chemicals, empowering scientists and researchers to drive progress in science and industry.

Contact

Address: 3281 E Guasti Rd

Ontario, CA 91761, United States

Phone: (601) 213-4426

Email: info@benchchem.com


© 2026 BenchChem. All rights reserved.

Contact our Ph.D. Support Team for a compatibility check

© 2026 BenchChem. All rights reserved.