Technical Support Center: Improving Cleminorexton Solubility for In Vitro Assays

Author: BenchChem Technical Support Team. **Date**: April 2026

Compound of Interest

Compound Name:	*Cleminorexton*
CAS No.:	*2980518-93-0*
Cat. No.:	*B15603656*

Get Quote

This technical support center provides researchers, scientists, and drug development professionals with troubleshooting guides and frequently asked questions (FAQs) to address challenges related to the solubility of **Cleminorexton** in in vitro experimental settings.

Frequently Asked Questions (FAQs)

Q1: What is the recommended starting solvent for **Cleminorexton**?

A1: For initial stock solutions, Dimethyl Sulfoxide (DMSO) is the recommended solvent for **Cleminorexton** and many other poorly soluble compounds.[1][2] DMSO is a powerful, polar aprotic solvent capable of dissolving a wide range of both polar and nonpolar compounds.[2][3]

Q2: My **Cleminorexton** precipitates when I dilute my DMSO stock solution into an aqueous buffer for my assay. What should I do?

A2: Precipitation upon dilution into aqueous media is a common issue for hydrophobic compounds. Several strategies can be employed to mitigate this:

© 2026 BenchChem. All rights reserved.

- Reduce the final DMSO concentration: Aim for the lowest possible final concentration of DMSO in your assay, typically well below 1%, as higher concentrations can be toxic to cells and may affect assay results.
- Use a co-solvent: Employing a water-miscible organic co-solvent can help maintain solubility.[4][5]
- Optimize pH: If **Cleminorexton** has ionizable groups, adjusting the pH of the aqueous buffer can significantly enhance its solubility.[4]
- Incorporate surfactants: Non-ionic surfactants can be used to increase the solubility of poorly soluble drugs.[6]

Q3: What are the main techniques to enhance the aqueous solubility of a compound like **Cleminorexton**?

A3: Solubility enhancement techniques can be broadly divided into physical and chemical modifications.[4]

- Physical Modifications: These include methods like particle size reduction (micronization, nanosuspension), creating solid dispersions, and forming amorphous states.[4][6][7]
- Chemical Modifications: These strategies involve salt formation, the use of co-solvents, pH adjustment, and complexation with agents like cyclodextrins.[4][7]

Troubleshooting Guide

Issue 1: **Cleminorexton** Precipitation in Aqueous Buffer

Q: I've prepared a 10 mM stock of **Cleminorexton** in DMSO, but it precipitates when I dilute it to 10 µM in my cell culture medium. How can I resolve this?

A: This is a classic sign of a compound crashing out of solution when the solvent environment changes from organic to aqueous. Here are some troubleshooting steps:

- Decrease Stock Concentration: Lowering the concentration of your DMSO stock solution can sometimes prevent precipitation upon dilution.[4]

© 2026 BenchChem. All rights reserved.

- Serial Dilution: Instead of a single large dilution, perform a series of smaller dilutions. For example, first, dilute into a mixture of DMSO and your aqueous buffer, and then further dilute into the final aqueous medium.[4]
- Increase Incubation Temperature: Solubility is often temperature-dependent. A modest increase in the incubation temperature of your final solution might help, but ensure it is compatible with your assay.[4]
- Use of Excipients: Consider the use of solubility-enhancing excipients in your final aqueous solution.

Issue 2: Inconsistent Results in Cellular Assays

Q: I am observing high variability in my experimental results when testing different batches of **Cleminorexton**. Could this be related to solubility?

A: Yes, inconsistent solubility can lead to variable effective concentrations in your assay, resulting in fluctuating results.

- Ensure Complete Dissolution of Stock: Before each use, ensure your **Cleminorexton** stock solution is fully dissolved. Vortexing and brief sonication can help.
- Equilibration Time: After diluting into the final aqueous medium, allow sufficient time for the solution to equilibrate before adding it to your cells. Insufficient equilibration can lead to inconsistent amounts of dissolved compound.[4]
- Characterize Solid Form: Different batches of a compound may have different crystalline forms (polymorphs), which can affect solubility.[4]

Quantitative Data Summary

The following tables provide representative data on the solubility of a hypothetical poorly soluble compound, "Compound X," which can be used as a reference for optimizing **Cleminorexton**'s solubility.

Table 1: Solubility of Compound X in Various Solvents

© 2026 BenchChem. All rights reserved.

Solvent	Solubility (mg/mL)
Water	< 0.01
PBS (pH 7.4)	< 0.01
DMSO	> 100
Ethanol	5.2
Propylene Glycol	12.5

Table 2: Effect of Co-solvents on Aqueous Solubility of Compound X

Aqueous System (PBS, pH 7.4)	Solubility (µg/mL)
No Co-solvent	0.8
1% DMSO	5.3
5% DMSO	28.1
1% Ethanol	3.2
5% Ethanol	15.7

Experimental Protocols

Protocol 1: Preparation of a **Cleminorexton** Stock Solution

- Accurately weigh the desired amount of **Cleminorexton** powder.
- Add the appropriate volume of 100% DMSO to achieve the target concentration (e.g., 10 mM).
- Vortex the solution vigorously for 1-2 minutes.
- If necessary, sonicate the vial in a water bath for 5-10 minutes to ensure complete dissolution.

© 2026 BenchChem. All rights reserved.

- Visually inspect the solution to confirm there are no visible particles.
- Store the stock solution at -20°C or -80°C in small aliquots to avoid repeated freeze-thaw cycles.

Protocol 2: Kinetic Solubility Assay

This protocol is adapted from high-throughput screening methods to assess the kinetic solubility of a compound.[8][9]

- Prepare a high-concentration stock solution of **Cleminorexton** in DMSO (e.g., 50 mM).[10]
- Add the **Cleminorexton** stock solution to the aqueous test buffer (e.g., PBS, pH 7.4) to a final concentration.
- Shake the mixture at room temperature for a defined period (e.g., 2 hours).
- Filter the solution to remove any precipitated compound.
- Analyze the concentration of the dissolved **Cleminorexton** in the filtrate using a suitable analytical method, such as LC-MS/MS or UV spectroscopy.[10]

Visualizations

Signaling Pathway

Below is a hypothetical signaling pathway that a compound like **Cleminorexton** might modulate. This diagram illustrates a generic receptor tyrosine kinase (RTK) pathway.

© 2026 BenchChem. All rights reserved.

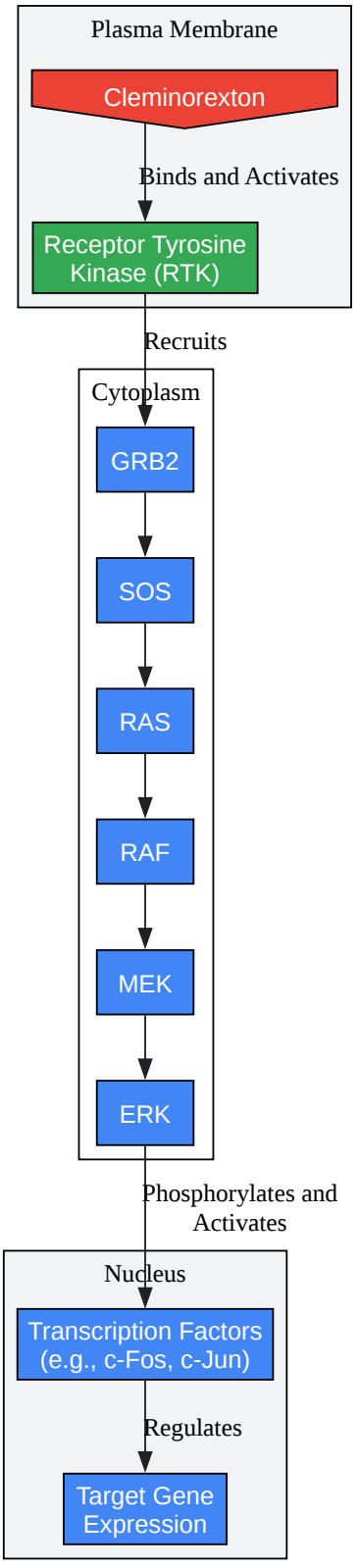

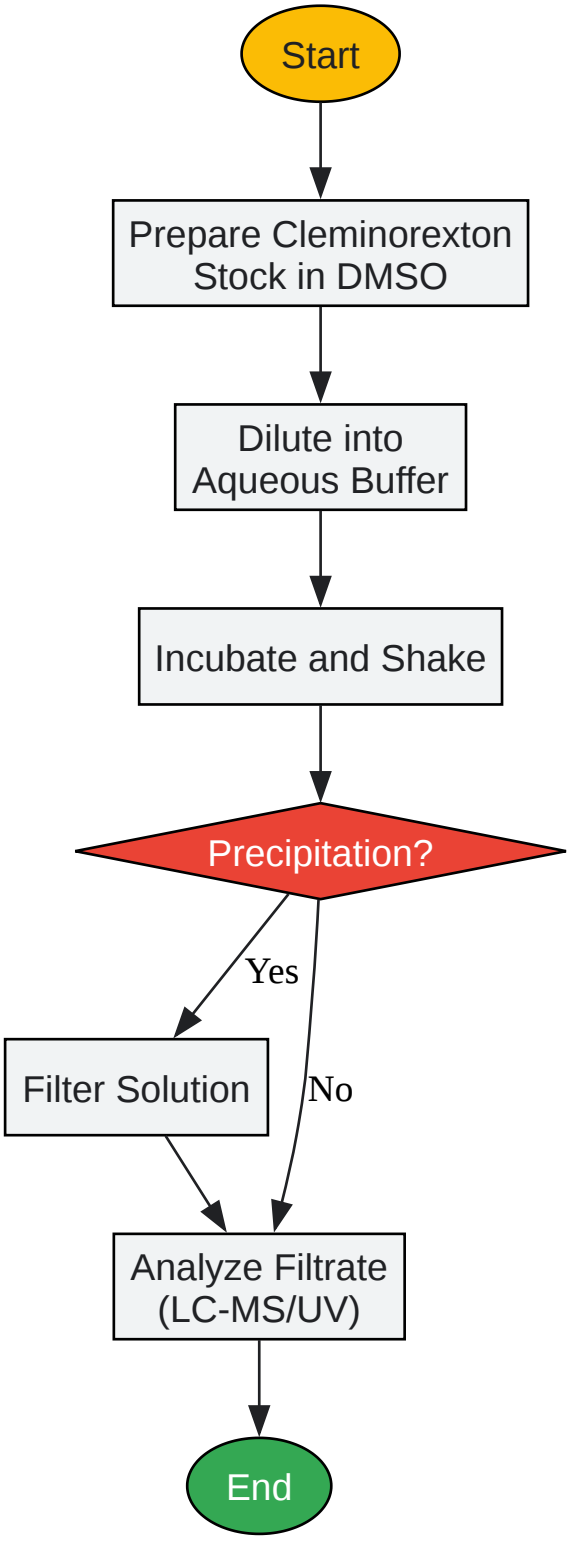

© 2026 BenchChem. All rights reserved.

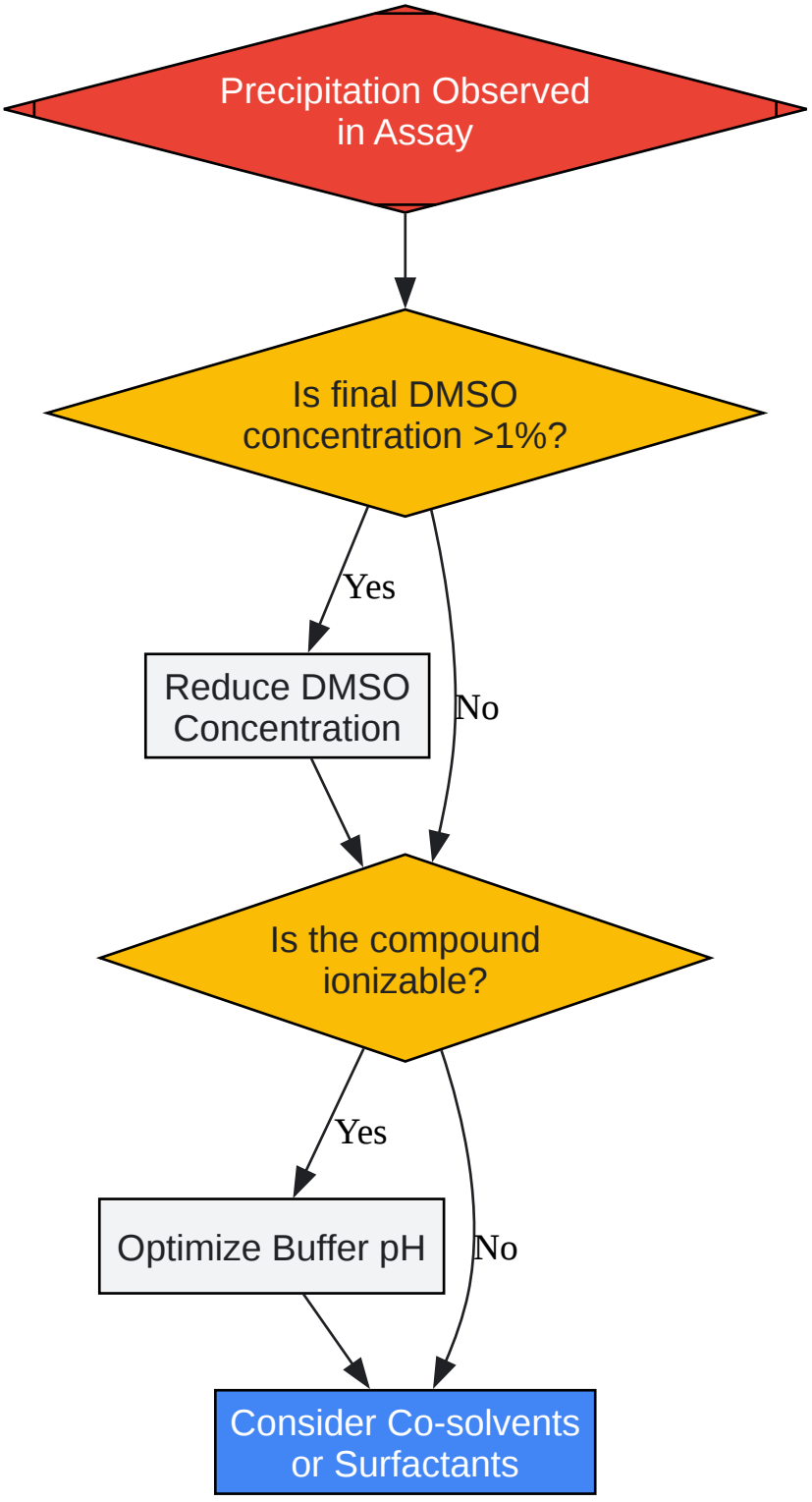

Click to download full resolution via product page

© 2026 BenchChem. All rights reserved.

Need Custom Synthesis?

BenchChem offers custom synthesis for rare earth carbides and specific isotopiclabeling.

Email: info@benchchem.com or Request Quote Online.

References

- 1. Solvent Selection for Insoluble Ligands, a Challenge for Biological Assay Development: A TNF-α/SPD304 Study - PMC [pmc.ncbi.nlm.nih.gov]
- 2. Dimethyl sulfoxide - Wikipedia [en.wikipedia.org]
- 3. gchemglobal.com [gchemglobal.com]
- 4. benchchem.com [benchchem.com]
- 5. Enhancing the Bioavailability of Poorly Soluble Compounds: Strategies for Formulation Optimization in Preclinical Studies - WuXi AppTec DMPK [dmpkservice.wuxiapptec.com]
- 6. Improvement in solubility of poor water-soluble drugs by solid dispersion - PMC [pmc.ncbi.nlm.nih.gov]
- 7. Advancement in Solubilization Approaches: A Step towards Bioavailability Enhancement of Poorly Soluble Drugs - PMC [pmc.ncbi.nlm.nih.gov]
- 8. In vitro solubility assays in drug discovery - PubMed [pubmed.ncbi.nlm.nih.gov]
- 9. Aqueous Solubility Assay - Enamine [enamine.net]
- 10. ADME Solubility Assay-BioDuro-Global CRDMO, Rooted in Science [bioduro.com]
- To cite this document: BenchChem. [Technical Support Center: Improving Cleminorexton Solubility for In Vitro Assays]. BenchChem, [2026]. [Online PDF]. Available at: [https://www.benchchem.com/product/b15603656/docs#technical-support-center-improving-cleminorexton-solubility-for-in-vitro-assays]

Disclaimer & Data Validity:

The information provided in this document is for Research Use Only (RUO) and is strictly not intended for diagnostic or therapeutic procedures. While BenchChem strives to provide accurate protocols, we make no warranties, express or implied, regarding the fitness of this product for every specific experimental setup.

© 2026 BenchChem. All rights reserved.

Technical Support: The protocols provided are for reference purposes. Unsure if this reagent suits your experiment?

Need Industrial/Bulk Grade? Request Custom Synthesis Quote

BenchChem

Our mission is to be the trusted global source of essential and advanced chemicals, empowering scientists and researchers to drive progress in science and industry.

Contact

Address: 3281 E Guasti Rd

Ontario, CA 91761, United States

Phone: (601) 213-4426

Email: info@benchchem.com

Contact our Ph.D. Support Team for a compatibility check

© 2026 BenchChem. All rights reserved.