A Comparative Guide to GRK2 Inhibitors: Cross-Validation of Experimental Results

Author: BenchChem Technical Support Team. **Date**: April 2026

Compound of Interest

Compound Name:	*GSK317354A*
Cat. No.:	*B15603997*

Get Quote

For Researchers, Scientists, and Drug Development Professionals

This guide provides a comparative analysis of experimental data for known inhibitors of G protein-coupled receptor kinase 2 (GRK2), a key therapeutic target in heart failure and other diseases. While this guide was initiated to cross-validate the experimental results of **GSK317354A**, a thorough search of publicly available scientific literature and clinical trial databases did not yield any specific experimental performance data for this compound. Therefore, this guide focuses on a selection of alternative and well-characterized GRK2 inhibitors: GSK180736A, Paroxetine, and CCG-222740. The data presented is intended to offer a baseline for the evaluation of current and future GRK2 inhibitors.

Data Presentation: Quantitative Comparison of GRK2 Inhibitors

The following table summarizes the in vitro potency of the selected GRK2 inhibitors. The data is compiled from various publicly available sources and presented for comparative analysis.

© 2026 BenchChem. All rights reserved.

Compound	Target	IC50 (μM)	Selectivity Notes	Source(s)
GSK180736A	GRK2	0.77	>100-fold selective over other GRKs. Also a potent ROCK1 inhibitor (IC50 = 0.1 μM). Weak inhibitor of PKA (IC50 = 30 μM).[1][2][3][4]	[1][2][3][4]
Paroxetine	GRK2	1.1 (at 5 μM ATP)	>6-fold selective over other GRKs.[4] Also a selective serotonin reuptake inhibitor (SSRI).[5][6]	[4][6][7]
CCG-222740	Rho/MRTF pathway	~10 (cell viability)	Potent inhibitor of alpha-smooth muscle actin (α-SMA) expression.[8][9]	[8][9][10]
CCG258747	GRK2	0.018	83-fold selectivity over GRK5. Little inhibition against ROCK1 at 10 μM.[11]	[11]

Experimental Protocols

Detailed methodologies are crucial for the cross-validation and replication of experimental findings. Below are summaries of the typical experimental protocols used to characterize the inhibitors discussed.

© 2026 BenchChem. All rights reserved.

In Vitro Kinase Activity Assay (for IC50 Determination)

This assay is fundamental for determining the potency of a compound against a specific kinase.

Objective: To measure the concentration of an inhibitor required to reduce the activity of a specific kinase by 50% (IC50).

General Procedure:

- Reaction Mixture Preparation: A reaction buffer is prepared containing HEPES, MgCl2, and a detergent like n-dodecyl β-D-maltoside.
- Enzyme and Substrate: A known concentration of the recombinant GRK enzyme (e.g., GRK2, GRK1, GRK5) and a suitable substrate (e.g., tubulin) are added to the reaction mixture.[11]
- Inhibitor Addition: The test compound (e.g., GSK180736A, Paroxetine) is added in a range of concentrations. A control with no inhibitor (vehicle, typically DMSO) is also prepared.
- Reaction Initiation: The kinase reaction is initiated by the addition of radiolabeled [γ-32P]ATP. [11]
- Incubation: The reaction is allowed to proceed for a defined period at a controlled temperature.
- Quenching: The reaction is stopped by adding a quenching solution, such as an SDS-loading buffer.[11]
- Analysis: The phosphorylated substrate is separated by SDS-PAGE, and the amount of incorporated radioactivity is quantified using a phosphorimager or similar detection method.
- IC50 Calculation: The percentage of inhibition at each compound concentration is calculated relative to the control. The IC50 value is then determined by fitting the data to a dose-response curve.

Cellular Assays for Target Engagement

© 2026 BenchChem. All rights reserved.

Cellular assays are critical for confirming that a compound can inhibit its target in a more physiologically relevant environment.

Objective: To assess the ability of an inhibitor to engage and inhibit its target kinase within a living cell.

Example: Live-Cell Receptor Internalization Assay[11]

- Cell Culture: Cells expressing a GPCR known to be regulated by GRK2 (e.g., μ-opioid receptor) are cultured.[11]
- Compound Treatment: The cells are pre-treated with the test inhibitor or vehicle for a specific duration.
- Agonist Stimulation: The GPCR is stimulated with a specific agonist to induce GRK2-mediated phosphorylation and subsequent receptor internalization.
- Quantification of Internalization: Receptor internalization can be measured using various techniques, such as high-content imaging of fluorescently tagged receptors or by quantifying the amount of receptor remaining on the cell surface via ELISA or flow cytometry.
- Analysis: The ability of the inhibitor to block or reduce agonist-induced receptor internalization is quantified and compared to the vehicle control.

Signaling Pathways and Experimental Workflows

The following diagrams illustrate the key signaling pathway involving GRK2 and a typical experimental workflow for inhibitor testing.

© 2026 BenchChem. All rights reserved.

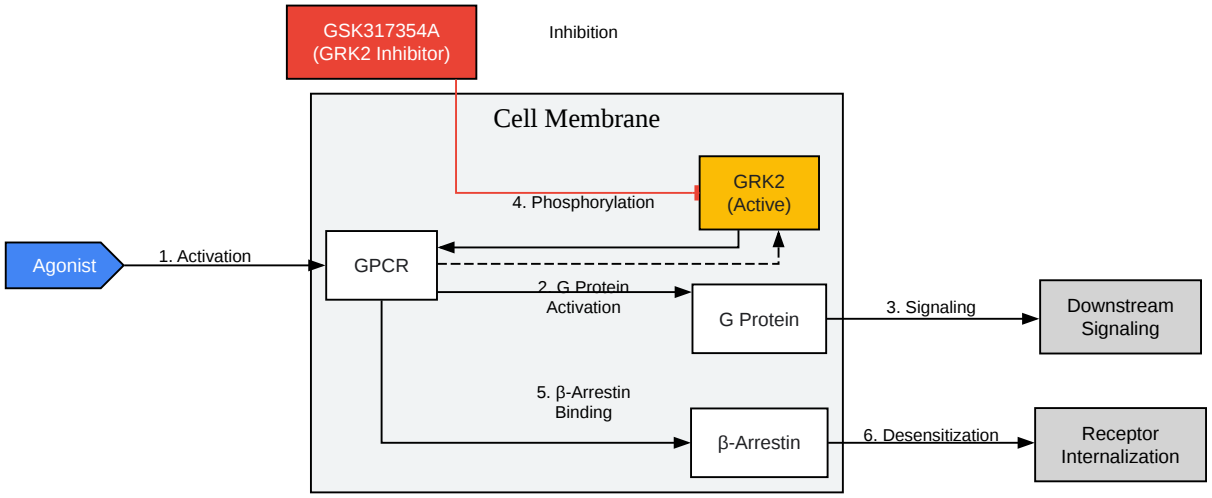

Click to download full resolution via product page

Caption: GRK2-mediated GPCR desensitization pathway and the inhibitory action of compounds like **GSK317354A**.

© 2026 BenchChem. All rights reserved.

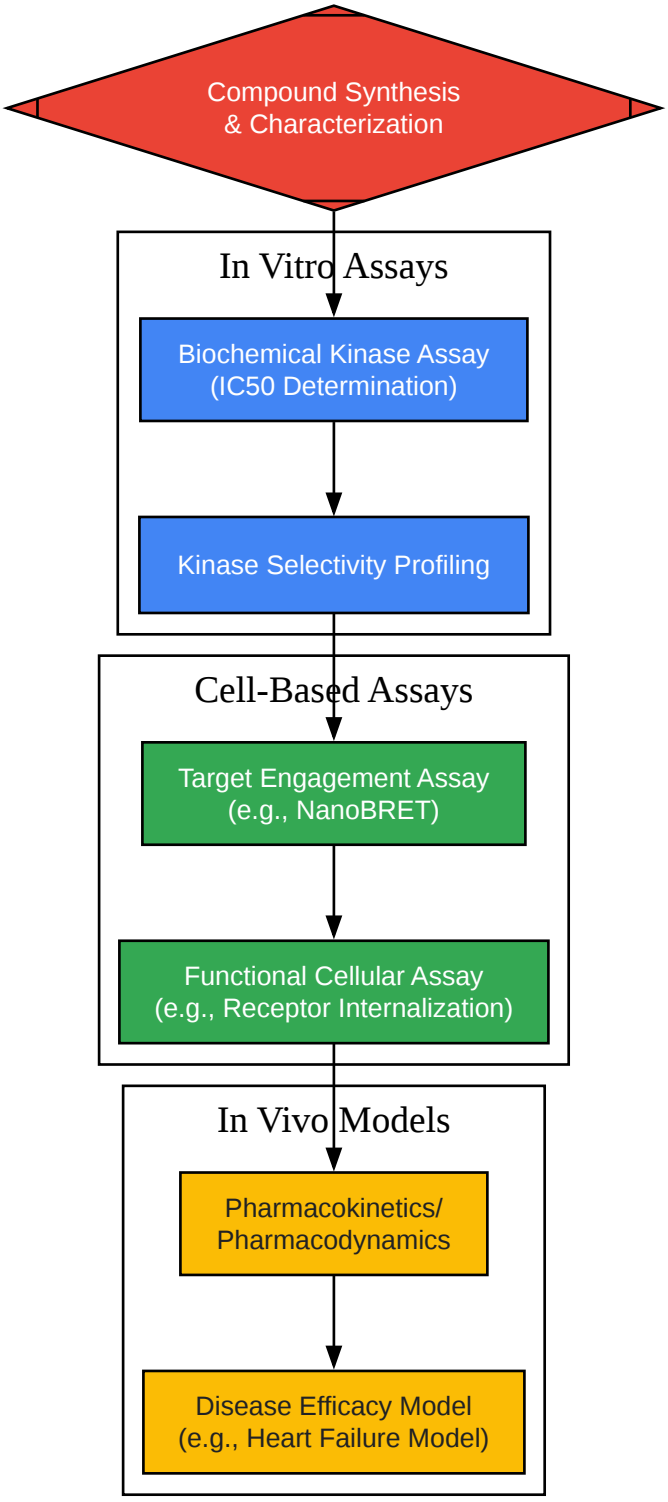

Click to download full resolution via product page

Caption: A generalized experimental workflow for the preclinical evaluation of a kinase inhibitor.

© 2026 BenchChem. All rights reserved.

Need Custom Synthesis?

BenchChem offers custom synthesis for rare earth carbides and specific isotopiclabeling.

Email: info@benchchem.com or Request Quote Online.

References

- 1. selleckchem.com [selleckchem.com]
- 2. GSK180736A | GRK | ROCK | PKA | TargetMol [targetmol.com]
- 3. medchemexpress.com [medchemexpress.com]
- 4. Structure-Based Design, Synthesis and Biological Evaluation of Highly Selective and Potent G Protein-Coupled Receptor Kinase 2 Inhibitors - PMC [pmc.ncbi.nlm.nih.gov]
- 5. Paroxetine Is a Direct Inhibitor of G Protein-Coupled Receptor Kinase 2 and Increases Myocardial Contractility - PMC [pmc.ncbi.nlm.nih.gov]
- 6. Paroxetine-mediated GRK2 inhibition reverses cardiac dysfunction and remodeling after myocardial infarction - PMC [pmc.ncbi.nlm.nih.gov]
- 7. Cardioprotective Effects of the GRK2 Inhibitor Paroxetine on Isoproterenol-Induced Cardiac Remodeling by Modulating NF-κB Mediated Prohypertrophic and Profibrotic Gene Expression - PMC [pmc.ncbi.nlm.nih.gov]
- 8. selleckchem.com [selleckchem.com]
- 9. medchemexpress.com [medchemexpress.com]
- 10. The Rho/MRTF pathway inhibitor CCG-222740 reduces stellate cell activation and modulates immune cell populations in KrasG12D; Pdx1-Cre (KC) mice - PMC [pmc.ncbi.nlm.nih.gov]
- 11. A New Paroxetine-Based GRK2 Inhibitor Reduces Internalization of the μ-Opioid Receptor - PMC [pmc.ncbi.nlm.nih.gov]
- To cite this document: BenchChem. [A Comparative Guide to GRK2 Inhibitors: Cross-Validation of Experimental Results]. BenchChem, [2026]. [Online PDF]. Available at: [https://www.benchchem.com/product/b15603997/docs#a-comparative-guide-to-grk2-inhibitors-cross-validation-of-experimental-results]

Disclaimer & Data Validity:

© 2026 BenchChem. All rights reserved.

The information provided in this document is for Research Use Only (RUO) and is strictly not intended for diagnostic or therapeutic procedures. While BenchChem strives to provide accurate protocols, we make no warranties, express or implied, regarding the fitness of this product for every specific experimental setup.

Technical Support: The protocols provided are for reference purposes. Unsure if this reagent suits your experiment?

Need Industrial/Bulk Grade? Request Custom Synthesis Quote

BenchChem

Our mission is to be the trusted global source of essential and advanced chemicals, empowering scientists and researchers to drive progress in science and industry.

Contact

Address: 3281 E Guasti Rd

Ontario, CA 91761, United States

Phone: (601) 213-4426

Email: info@benchchem.com

Contact our Ph.D. Support Team for a compatibility check

© 2026 BenchChem. All rights reserved.