Technical Support Center: Modification of Bismuth Phosphate for Visible Light Photocatalysis

Author: BenchChem Technical Support Team. **Date**: May 2026

Compound of Interest

Compound Name:	*Bismuth phosphate*
CAS No.:	*10049-01-1*
Cat. No.:	*B156072*

Get Quote

Welcome to the technical support center for the modification of **bismuth phosphate** (BiPO4) photocatalysts. This guide is designed for researchers, scientists, and professionals engaged in developing advanced photocatalytic materials. Here, we address common challenges and frequently asked questions encountered during the synthesis, characterization, and testing of modified BiPO4 for visible light applications. Our approach is rooted in explaining the causal relationships behind experimental phenomena to empower you to troubleshoot effectively and innovate confidently.

Section 1: Foundational Concepts & Frequently Asked Questions

This section addresses the fundamental principles underlying the need to modify **bismuth phosphate** for visible light photocatalysis.

Question 1: Why is pristine **Bismuth Phosphate** (BiPO4) an inefficient photocatalyst under visible light?

© 2026 BenchChem. All rights reserved.

Answer: Pristine **bismuth phosphate** is a robust semiconductor with several advantages, but its application in solar-driven processes is limited by two primary factors[1][2]:

- Wide Band Gap: BiPO4 possesses a wide energy bandgap (typically > 3.8 eV), meaning it can primarily absorb high-energy ultraviolet (UV) light.[3] This portion constitutes less than 5% of the total solar spectrum, leaving the vast majority of visible light energy unutilized.
- High Recombination Rate: Even when UV light generates electron-hole pairs (charge carriers) in BiPO4, these carriers tend to recombine rapidly, releasing energy as heat or light instead of participating in the desired redox reactions.[2] This significantly lowers the quantum efficiency of the photocatalytic process.

Essentially, unmodified BiPO4 cannot "see" or effectively use the most abundant part of the solar spectrum.

Question 2: What are the principal strategies for sensitizing BiPO4 to visible light?

Answer: To overcome the limitations of pristine BiPO4, several modification strategies are employed. These aim to enhance visible light absorption and improve charge carrier separation. The most common and effective approaches include:

- Heterojunction Construction: Coupling BiPO4 with a narrow-bandgap semiconductor (e.g., g-C3N4, Bi2S3). This creates an internal electric field at the interface that promotes the separation of electrons and holes.[4][5][6]
- Doping: Introducing foreign atoms (metal or non-metal) into the BiPO4 crystal lattice. Doping can create defect energy levels within the bandgap, which act as stepping stones for electrons to be excited by lower-energy visible light.[7]
- Noble Metal Deposition: Decorating the BiPO4 surface with nanoparticles of noble metals like Silver (Ag) or Platinum (Pt). These nanoparticles can induce a Surface Plasmon Resonance (SPR) effect, which enhances visible light absorption, and they can act as electron sinks, trapping photogenerated electrons to prevent recombination.[4][8]
- Quantum Dots (QDs) Sensitization: Using semiconductor quantum dots as sensitizers. QDs absorb visible light and then transfer the energy or charge carriers to the BiPO4. Bismuth itself can be made into quantum dots, which exhibit unique photocatalytic properties.[3][9]

© 2026 BenchChem. All rights reserved.

Question 3: How does forming a heterojunction, for example with graphitic carbon nitride (g-C3N4), improve photocatalytic performance?

Answer: Creating a g-C3N4/BiPO4 heterojunction is a highly effective strategy that addresses both of BiPO4's primary weaknesses.[4]

- Enhanced Light Absorption: g-C3N4 is a semiconductor with a narrow band gap (~2.7 eV), allowing it to absorb a significant portion of the visible light spectrum. Its presence in the composite immediately broadens the range of usable light energy.[4]

- Improved Charge Separation: When BiPO4 and g-C3N4 are in intimate contact, their differing band alignments create an internal electric field at the junction interface. When visible light excites g-C3N4, the photogenerated electrons are transferred to the conduction band of BiPO4, while the holes remain in the valence band of g-C3N4. This spatial separation of charge carriers dramatically reduces the probability of recombination, making them more available for redox reactions.[1][4] This mechanism is often described as a Type-II or Z-scheme heterojunction, depending on the specific band alignment.[10][11]

Section 2: Synthesis and Characterization Troubleshooting

This section provides practical guidance on common issues encountered during the experimental phase.

Problem 1: My synthesized BiPO4 shows an inconsistent crystal phase or morphology in the final product.

Possible Causes & Solutions:

- Cause 1: pH of the Precursor Solution. The pH during synthesis significantly influences the crystal structure and morphology of BiPO4. Different phosphate precursors (e.g., Na2HPO4, KH2PO4) yield different initial pH values, which can affect the final product.[12][13]

  - Solution: Carefully control and monitor the pH of the reaction mixture. If using a hydrothermal method, ensure the pH is adjusted before sealing the autoclave. It is

© 2026 BenchChem. All rights reserved.

advisable to standardize the phosphate source or use a buffer to maintain a consistent pH across batches.

- Cause 2: Reaction Temperature and Time (Hydrothermal/Solvothermal). Insufficient temperature or time can lead to incomplete crystallization or the formation of metastable phases. Conversely, excessive temperature or time may cause particle agglomeration.
  - Solution: Optimize the hydrothermal reaction parameters. Start with established literature values (e.g., 160-180°C for 12-24 hours) and systematically vary the temperature and duration to find the optimal conditions for your specific setup and precursors.[14][15]
- Cause 3: Solvent Effects. The choice of solvent (e.g., water, ethanol, ethylene glycol) can dramatically alter the morphology (nanorods, snowflakes, microspheres) by influencing precursor solubility and crystal growth kinetics.[14][16]
  - Solution: Ensure you are using the correct solvent for the desired morphology as described in your protocol. If developing a new method, consider solvent screening as a key experimental variable.

Problem 2: My UV-Vis Diffuse Reflectance Spectroscopy (DRS) data shows only a minor red-shift after modification.

Possible Causes & Solutions:

- Cause 1: Insufficient Dopant/Modifier Loading. The concentration of the modifying agent (dopant, coupled semiconductor, noble metal) may be too low to induce a significant change in the bulk optical properties of the material.
  - Solution: Prepare a series of samples with varying weight percentages of the modifier (e.g., 0.5 wt%, 1.5 wt%, 2.5 wt% for g-C3N4).[4] This will help you identify an optimal loading level where the light absorption is maximized without introducing excessive charge recombination centers.
- Cause 2: Poor Interfacial Contact. In heterojunctions, if the two materials are not in intimate contact, the electronic coupling required for enhanced light absorption and charge transfer will be minimal. This can result from simple physical mixing rather than in-situ growth or deposition.

© 2026 BenchChem. All rights reserved.

- Solution: Revise your synthesis method to promote better interfacial connection. Methods like in-situ hydrothermal synthesis, where one component grows directly on the surface of the other, are superior to mechanical mixing. Characterization with High-Resolution Transmission Electron Microscopy (HRTEM) can visually confirm the quality of the interface.

- Cause 3: Modifier is Shielded. The active modifier might be covered by an inactive layer or aggregated, preventing it from interacting with light.

  - Solution: Review your synthesis and washing steps. Ensure that precursors are fully reacted and that no amorphous byproducts are coating your catalyst. Sonication during synthesis or post-synthesis treatment can help break up aggregates.

Problem 3: The Photoluminescence (PL) intensity of my modified catalyst is unexpectedly higher than that of pure BiPO4.

Explanation: Typically, a decrease in PL intensity is desired, as it indicates a lower rate of electron-hole recombination. A higher PL intensity suggests that recombination has increased, which is counterproductive.

Possible Causes & Solutions:

- Cause 1: Introduction of Recombination Centers. Excessive loading of a dopant or modifier can create an abundance of defect sites in the crystal structure. While intended to aid charge separation, too many of these sites can act as recombination centers, trapping both electrons and holes where they can easily recombine.

  - Solution: As with the DRS issue, optimize the loading percentage of your modifier. Create a series of concentrations and perform PL analysis on each to find the concentration that yields the lowest PL intensity, indicating the most effective charge separation.

- Cause 2: Phase Impurities. The synthesis process may have created unintended impurity phases that are highly luminescent or promote recombination.

  - Solution: Use X-ray Diffraction (XRD) to carefully check the phase purity of your synthesized material. Compare your XRD pattern against reference patterns for BiPO4 and your modifying material to identify any unexpected peaks.

© 2026 BenchChem. All rights reserved.

Section 3: Standardized Experimental Protocols

Adherence to standardized protocols is crucial for reproducible results. Below are detailed, step-by-step methodologies for common experiments.

Protocol 1: Synthesis of g-C3N4/BiPO4 Heterojunction via Hydrothermal Method

This protocol is adapted from common synthesis procedures aimed at creating an intimate interface between the two semiconductors.

Step-by-Step Methodology:

- Synthesis of g-C3N4:
  - Place 10 g of melamine in a covered ceramic crucible.
  - Heat the crucible in a muffle furnace to 550°C for 4 hours with a ramp rate of 5°C/min.
  - Allow the furnace to cool naturally to room temperature.
  - Grind the resulting yellow g-C3N4 agglomerates into a fine powder.
- Preparation of BiPO4 Precursor Solution:
  - In a beaker, dissolve 1.94 g of Bismuth Nitrate Pentahydrate (Bi(NO3)3·5H2O) in 30 mL of 2M nitric acid with vigorous stirring.
- Formation of the Composite:
  - Disperse a calculated amount of the prepared g-C3N4 powder (e.g., for a 2.5 wt% composite, use ~0.05 g) in 50 mL of deionized water and sonicate for 30 minutes to create a uniform suspension.
  - Slowly add the BiPO4 precursor solution to the g-C3N4 suspension under continuous stirring.

© 2026 BenchChem. All rights reserved.

- Add a stoichiometric amount of a phosphate source, such as diammonium phosphate ((NH4)2HPO4), dropwise to the mixture to initiate the precipitation of BiPO4 onto the g-C3N4 nanosheets.
- Adjust the pH of the final mixture to ~5 using a dilute NaOH or NH3·H2O solution.

- Hydrothermal Treatment:
  - Transfer the resulting suspension into a 100 mL Teflon-lined stainless-steel autoclave.
  - Seal the autoclave and heat it in an oven at 180°C for 18 hours.
- Washing and Drying:
  - After the autoclave cools to room temperature, collect the precipitate by centrifugation (e.g., 8000 rpm for 5 minutes).
  - Wash the product repeatedly with deionized water and absolute ethanol (at least 3 cycles each) to remove any unreacted ions.
  - Dry the final g-C3N4/BiPO4 composite in a vacuum oven at 60°C for 12 hours.

Protocol 2: Evaluation of Photocatalytic Activity (Degradation of Rhodamine B)

This protocol outlines a standard procedure for testing the performance of your synthesized photocatalyst using a model organic dye.

Step-by-Step Methodology:

- Preparation of the Reaction Suspension:
  - Disperse 50 mg of the photocatalyst powder in 100 mL of a 10 mg/L Rhodamine B (RhB) aqueous solution in a glass beaker.
- Adsorption-Desorption Equilibrium:

© 2026 BenchChem. All rights reserved.

- Stir the suspension in complete darkness for 60 minutes to ensure that an adsorption-desorption equilibrium is reached between the catalyst surface and the RhB molecules.
- Take an initial sample (t = 0) at the end of this period. Centrifuge the sample to remove the catalyst particles before analysis.

- Photocatalytic Reaction:
  - Illuminate the suspension using a suitable visible light source (e.g., a 300W Xenon lamp with a 420 nm cutoff filter to block UV light). Ensure the lamp is positioned at a fixed distance from the beaker.
  - Maintain constant stirring throughout the experiment to keep the catalyst suspended. A water jacket can be used to maintain a constant temperature.
- Sampling and Analysis:
  - At regular time intervals (e.g., every 15 or 30 minutes), withdraw approximately 3-4 mL of the suspension.
  - Immediately centrifuge each sample at high speed (e.g., 10,000 rpm for 3 minutes) to separate the photocatalyst.
  - Analyze the concentration of RhB in the clear supernatant using a UV-Vis Spectrophotometer by measuring the absorbance at its characteristic maximum wavelength (~554 nm).
- Data Analysis:
  - Calculate the degradation efficiency using the formula: Degradation (%) = (C0 - Ct) / C0 * 100, where C0 is the concentration after reaching adsorption equilibrium and Ct is the concentration at time t.
  - Plot ln(C0/Ct) versus time. If the plot is linear, the reaction follows pseudo-first-order kinetics, and the apparent rate constant (k) can be determined from the slope.[17]

Section 4: Data Interpretation and Visualization

© 2026 BenchChem. All rights reserved.

Visual aids and comparative data are essential for understanding the effects of modification.

Comparative Performance of Modified BiPO4 Systems

The following table summarizes typical performance data for different BiPO4-based photocatalysts in the degradation of an organic pollutant under visible light.

Photocatalyst System	Modifier	Typical Loading (wt%)	Degradation Efficiency (%)	Time (min)	Key Enhancement Mechanism
Pristine BiPO4	None	N/A	< 10%	120	(Baseline)
Ag/BiPO4	Silver Nanoparticles	3.0 - 5.0%	~76%[4]	300	Surface Plasmon Resonance, Electron Trapping[4]
g-C3N4/BiPO4	g-C3N4 Nanosheets	2.5%	~100%[4]	90	Heterojunction, Enhanced Light Absorption[4]

Note: Efficiency values are highly dependent on experimental conditions (pollutant type, concentration, light source, etc.) and are provided for comparative illustration.

Diagrams of Mechanisms and Workflows

Diagram 1: Charge Transfer in a g-C3N4/BiPO4 Type-II Heterojunction

© 2026 BenchChem. All rights reserved.

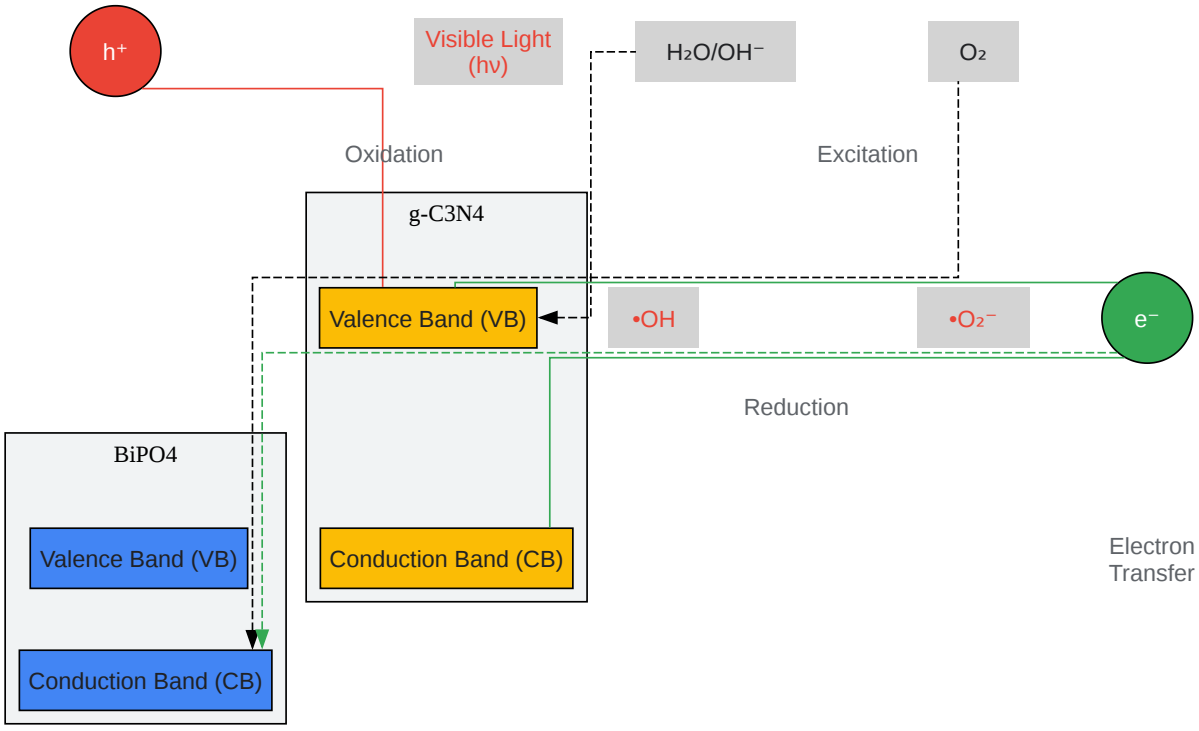

© 2026 BenchChem. All rights reserved.

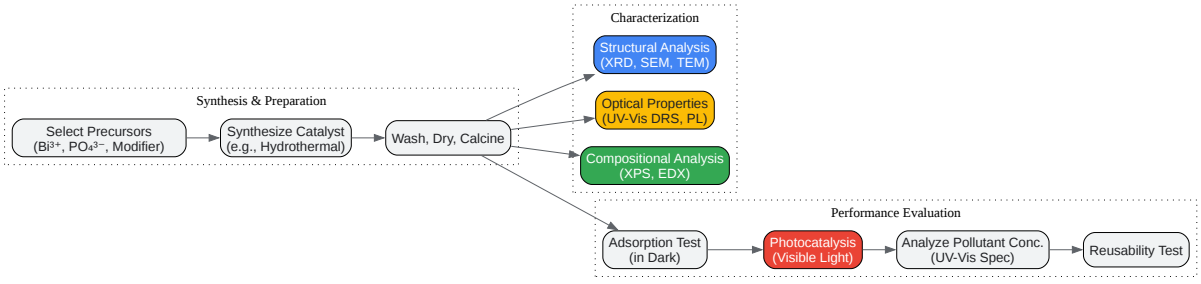

Click to download full resolution via product page

Caption: Standard workflow from material synthesis to performance evaluation.

References

- Modification of **bismuth phosphate** based nanomaterial as sunlight sensitive photocatalysts. (2022). UTAR Institutional Repository.
- modification of **bismuth phosphate** based nanomaterial as sunlight sensitive photocatalysts - UTAR Institutional Repository. (n.d.). UTAR Institutional Repository.
- CN103111315A - A preparation method of **bismuth phosphate** (BiPO4) photocatalyst with different structures - Google Patents. (n.d.).
- CN103272624B - A kind of preparation method of **bismuth phosphate** photocatalyst - Google Patents. (n.d.).
- (PDF) Bismuth-Based Z-Scheme Heterojunction Photocatalysts for Remediation of Contaminated Water - ResearchGate. (2024).
- Customized synthesis of functional **bismuth phosphate** using different methods: photocatalytic and photoluminescence properties enhancement | Request PDF - ResearchGate. (n.d.).

© 2026 BenchChem. All rights reserved.

- Bismuth-Based Z-Scheme Heterojunction Photocatalysts for Remediation of Contaminated Water - PMC - NIH. (n.d.).
- Characterization, Settling, and Recovery of **Bismuth Phosphate** Photoc
- Effect of bismuth doping on the crystal structure and photocatalytic activity of titanium oxide - RSC Publishing. (n.d.). Royal Society of Chemistry.
- Electrochemical and Optical Insights into Interfacial Connection for Fast Pollutant Removal: Experimental Study of g-C3N4/BiOCl Heterojunction for Rhb and MO Photodegrad
- Inorganic Bismuth Catalysts for Photocatalytic Organic Reactions - MDPI. (n.d.). MDPI.
- Bismuth-based nanostructured photocatalysts for the remediation of antibiotics and organic dyes - PubMed. (2023).
- Bismuth-based nanostructured photocatalysts for the remediation of antibiotics and organic dyes - Beilstein Journals. (n.d.). Beilstein-Institut.
- an overview of bismuth-based photocatalysts for energy conversion, environmental treatment and biomedical applications - Materials Advances (RSC Publishing). (n.d.). Royal Society of Chemistry.
- High-Efficiency, Visible-Light-Induced Direct Dehydrogenative Phosphonylation by Bismuth Quantum Dots under Ambient Conditions - ResearchGate. (n.d.).
- Bismuth-based Photocatalysts: Introduction, Challenges and Possible Approaches | Request PDF - ResearchGate. (n.d.).
- Noble Metal-Like Behavior of Plasmonic Bi Particles as a Cocatalyst Deposited on (BiO)2CO3 Microspheres for Efficient Visible Light Photocatalysis | ACS Catalysis - ACS Publications. (2014). American Chemical Society.
- Bismuth-Based Z-Scheme Heterojunction Photocatalysts for Remediation of Contaminated Water | ACS Omega - ACS Publications. (n.d.). American Chemical Society.
- Recent Progress and Challenges of Bismuth-Based Photocatalysts: Fundamentals and Applications - PubMed. (2025).

Need Custom Synthesis?

BenchChem offers custom synthesis for rare earth carbides and specific isotopiclabeling.

Email: info@benchchem.com or Request Quote Online.

Sources

- 1. eprints.utar.edu.my [eprints.utar.edu.my]

- 2. One bismuth three benefits: an overview of bismuth-based photocatalysts for energy conversion, environmental treatment and biomedical applications - Materials Advances (RSC Publishing) [pubs.rsc.org]
- 3. BJNANO - Bismuth-based nanostructured photocatalysts for the remediation of antibiotics and organic dyes [beilstein-journals.org]
- 4. Modification of bismuth phosphate based nanomaterial as sunlight sensitive photocatalysts - UTAR Institutional Repository [eprints.utar.edu.my]
- 5. Bismuth-based nanostructured photocatalysts for the remediation of antibiotics and organic dyes - PubMed [pubmed.ncbi.nlm.nih.gov]
- 6. Recent Progress and Challenges of Bismuth-Based Photocatalysts: Fundamentals and Applications - PubMed [pubmed.ncbi.nlm.nih.gov]
- 7. Effect of bismuth doping on the crystal structure and photocatalytic activity of titanium oxide - RSC Advances (RSC Publishing) [pubs.rsc.org]
- 8. pubs.acs.org [pubs.acs.org]
- 9. researchgate.net [researchgate.net]
- 10. researchgate.net [researchgate.net]
- 11. pubs.acs.org [pubs.acs.org]
- 12. researchgate.net [researchgate.net]
- 13. researchgate.net [researchgate.net]
- 14. CN103111315A - A preparation method of bismuth phosphate (BiPO4) photocatalyst with different structures - Google Patents [patents.google.com]
- 15. CN103272624B - A kind of preparation method of bismuth phosphate photocatalyst - Google Patents [patents.google.com]
- 16. mdpi.com [mdpi.com]
- 17. Electrochemical and Optical Insights into Interfacial Connection for Fast Pollutant Removal: Experimental Study of g-C3N4/BiOCl Heterojunction for Rhb and MO Photodegradation | MDPI [mdpi.com]

- To cite this document: BenchChem. [Technical Support Center: Modification of Bismuth Phosphate for Visible Light Photocatalysis]. BenchChem, [2026]. [Online PDF]. Available at: [https://www.benchchem.com/product/b156072/docs#technical-support-center-modification-of-bismuth-phosphate-for-visible-light-photocatalysis]

Disclaimer & Data Validity:

The information provided in this document is for Research Use Only (RUO) and is strictly not intended for diagnostic or therapeutic procedures. While BenchChem strives to provide accurate protocols, we make no warranties, express or implied, regarding the fitness of this product for every specific experimental setup.

Technical Support: The protocols provided are for reference purposes. Unsure if this reagent suits your experiment?

Need Industrial/Bulk Grade? Request Custom Synthesis Quote

BenchChem

Our mission is to be the trusted global source of essential and advanced chemicals, empowering scientists and researchers to drive progress in science and industry.

Contact

Address: 3281 E Guasti Rd

Ontario, CA 91761, United States

Phone: (601) 213-4426

Email: info@benchchem.com

Contact our Ph.D. Support Team for a compatibility check

© 2026 BenchChem. All rights reserved.