Application Note: Isolating **3-Acetoxy-8(17),13E-labdadien-15-oic acid**

Author: BenchChem Technical Support Team. **Date**: April 2026

Compound of Interest

Compound Name:	*3-Acetoxy-8(17),13E-labdadien-15-oic acid*
Cat. No.:	*B15595956*

Get Quote

Introduction

3-Acetoxy-8(17),13E-labdadien-15-oic acid is a labdane-type diterpenoid that has garnered interest within the scientific community. This document outlines a detailed protocol for the isolation and purification of this compound from the rhizomes of Cibotium barometz, a known natural source.[1][2] The described methodology is intended for researchers in natural product chemistry, pharmacology, and drug development.

Compound Profile

© 2026 BenchChem. All rights reserved.

Parameter	Details
Compound Name	3-Acetoxy-8(17),13E-labdadien-15-oic acid
CAS Number	63399-37-1
Molecular Formula	$C_{22}H_{34}O_4$
Molecular Weight	362.5 g/mol
Class	Labdane Diterpenoid
Natural Source	Rhizomes of Cibotium barometz[1][2]
Solubility	Soluble in Chloroform, Dichloromethane, Ethyl Acetate, DMSO, Acetone.[2]

Experimental Workflow



Click to download full resolution via product page

Caption: Workflow for the isolation of **3-Acetoxy-8(17),13E-labdadien-15-oic acid**.

Hypothetical Purification Summary

The following table presents hypothetical data for a typical isolation process to provide an expected outcome for yield and purity at each step.

© 2026 BenchChem. All rights reserved.

Purification Step	Starting Material (g)	Product Mass (g)	Step Yield (%)	Purity (%)
Crude Hexane Extract	1000	50	5.0	~10
Silica Gel Chromatography	50	5	10.0	~60
Preparative RP-HPLC	5	0.5	10.0	>98
Overall Yield	0.05			

Detailed Experimental Protocol

Materials and Reagents

- Plant Material: Dried and powdered rhizomes of Cibotium barometz.
- Extraction Solvents: 95% Ethanol (EtOH), n-Hexane.
- Chromatography:
  - Silica gel (60-120 mesh) for column chromatography.
  - Analytical Thin Layer Chromatography (TLC) plates (silica gel 60 F254).
  - C18 reversed-phase silica gel for preparative High-Performance Liquid Chromatography (HPLC).
  - HPLC grade solvents: Acetonitrile (ACN) and Water.
- General Reagents: Anhydrous sodium sulfate (Na_2SO_4), HPLC grade water.
- Equipment:
  - Grinder or mill.
  - Soxhlet extractor or large-scale percolation apparatus.

© 2026 BenchChem. All rights reserved.

- Rotary evaporator.
- Glass chromatography columns.
- Preparative HPLC system with a UV detector.
- Standard laboratory glassware.

Extraction of Crude Material

- Preparation of Plant Material: Grind the dried rhizomes of Cibotium barometz to a coarse powder to increase the surface area for extraction.
- Primary Extraction:
  - Macerate the powdered rhizomes (1 kg) in 95% ethanol (5 L) at room temperature for 72 hours with occasional stirring.
  - Filter the extract and repeat the maceration of the plant residue two more times with fresh ethanol.
  - Combine the ethanol extracts and concentrate under reduced pressure using a rotary evaporator to obtain a crude ethanol extract.
- Solvent Partitioning:
  - Suspend the crude ethanol extract in water and partition successively with n-hexane.
  - Collect the n-hexane fractions, which will contain the less polar compounds, including the target diterpenoid.
  - Dry the combined hexane fractions over anhydrous sodium sulfate and concentrate using a rotary evaporator to yield the crude hexane extract.

Chromatographic Fractionation

- Silica Gel Column Chromatography:
  - Prepare a silica gel column using a slurry of silica gel in n-hexane.

© 2026 BenchChem. All rights reserved.

- Adsorb the crude hexane extract onto a small amount of silica gel and load it onto the top of the column.
- Elute the column with a gradient of n-hexane and ethyl acetate, starting with 100% n-hexane and gradually increasing the polarity.
- Collect fractions of 50-100 mL and monitor the separation by TLC.
- Combine fractions containing the target compound based on their TLC profiles.
- Concentrate the combined fractions to yield a semi-purified extract.

High-Performance Liquid Chromatography (HPLC) Purification

- Preparative RP-HPLC:
  - Dissolve the semi-purified extract in a minimal amount of the mobile phase.
  - Purify the extract using a preparative reversed-phase (C18) HPLC column.
  - Use an isocratic or gradient elution with a mobile phase of acetonitrile and water. A typical starting point could be a ratio of 70:30 (ACN:Water).
  - Monitor the elution at a suitable wavelength (e.g., 210 nm) for detecting the compound of interest.
  - Collect the peak corresponding to **3-Acetoxy-8(17),13E-labdadien-15-oic acid**.
  - Concentrate the collected fraction under reduced pressure to remove the mobile phase and obtain the pure compound.

Structure Elucidation

The identity and purity of the isolated **3-Acetoxy-8(17),13E-labdadien-15-oic acid** should be confirmed using spectroscopic methods such as Nuclear Magnetic Resonance (^{1}H-NMR, ^{13}C-NMR) and Mass Spectrometry (MS).

© 2026 BenchChem. All rights reserved.

Signaling Pathway Diagram (Hypothetical)

While the direct signaling pathway of **3-Acetoxy-8(17),13E-labdadien-15-oic acid** is not fully elucidated in the provided search results, a hypothetical diagram illustrating a potential interaction with a generic signaling cascade is presented below for illustrative purposes.

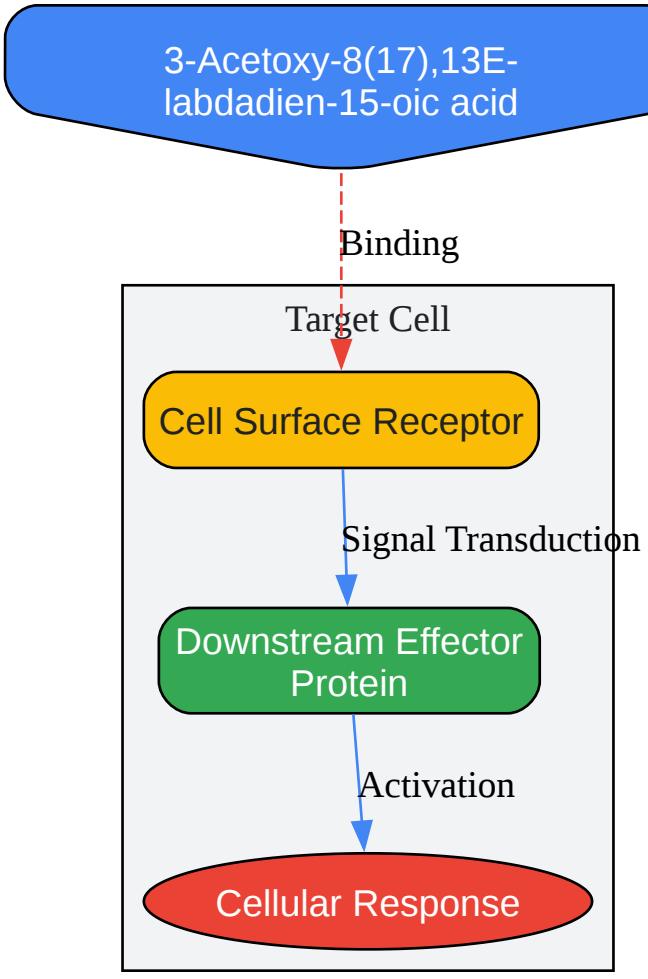

Click to download full resolution via product page

Caption: Hypothetical signaling pathway interaction.

References

- 1. researchgate.net [researchgate.net]

© 2026 BenchChem. All rights reserved.

- 2. 3-Acetoxy-8(17),13E-labdadien-15-oic acid | Terpenoids | 63399-37-1 | Invivochem [invivochem.com]
- To cite this document: BenchChem. [Application Note: Isolating 3-Acetoxy-8(17),13E-labdadien-15-oic acid]. BenchChem, [2026]. [Online PDF]. Available at: [https://www.benchchem.com/product/b15595956/docs#application-note-isolating-3-acetoxy-8-17-13e-labdadien-15-oic-acid]

Disclaimer & Data Validity:

The information provided in this document is for Research Use Only (RUO) and is strictly not intended for diagnostic or therapeutic procedures. While BenchChem strives to provide accurate protocols, we make no warranties, express or implied, regarding the fitness of this product for every specific experimental setup.

Technical Support: The protocols provided are for reference purposes. Unsure if this reagent suits your experiment?

Need Industrial/Bulk Grade? Request Custom Synthesis Quote

BenchChem

Our mission is to be the trusted global source of essential and advanced chemicals, empowering scientists and researchers to drive progress in science and industry.

Contact

Address: 3281 E Guasti Rd

Ontario, CA 91761, United States

Phone: (601) 213-4426

Email: info@benchchem.com

Contact our Ph.D. Support Team for a compatibility check

© 2026 BenchChem. All rights reserved.