Technical Support Center: Carmichaeline E Stability and Degradation

Author: BenchChem Technical Support Team. **Date**: April 2026

Compound of Interest

Compound Name: *Carmichaenine E*

Cat. No.: *B15594935*

Get Quote

Disclaimer: Specific stability and degradation data for Carmichaeline E are limited in publicly available scientific literature. This guide is based on established principles and data from studies on structurally similar diester-diterpenoid alkaloids, particularly those from the Aconitum genus, to provide a comprehensive resource for researchers.

This technical support center provides troubleshooting guidance and frequently asked questions (FAQs) to assist researchers, scientists, and drug development professionals in their experimental work with Carmichaeline E, focusing on its stability and degradation.

Frequently Asked Questions (FAQs)

Q1: What are the primary factors that can affect the stability of Carmichaeline E in solution?

A1: The stability of diester-diterpenoid alkaloids like Carmichaeline E is significantly influenced by several factors. These include the pH of the solution, the type of solvent used, temperature, and exposure to light.[1] Understanding these factors is crucial for designing stable formulations and ensuring the accuracy of analytical measurements.

Q2: How does pH impact the degradation of Carmichaeline E?

© 2026 BenchChem. All rights reserved.

A2: Diterpenoid alkaloids often exhibit pH-dependent stability. Generally, these compounds are more susceptible to hydrolysis under alkaline conditions.[1] For instance, in a pH 10.0 buffer, the hydrolysis of similar alkaloids has been observed, leading to the formation of degradation products.[1] Acidic and neutral conditions may favor other degradation pathways, such as pyrolysis.

Q3: What are the expected degradation products of Carmichaeline E?

A3: Based on studies of similar diester-diterpenoid alkaloids, the degradation of Carmichaeline E is likely to proceed via hydrolysis and pyrolysis. Hydrolysis of the ester groups can lead to the formation of monoester and non-ester alkaloid derivatives. Pyrolytic degradation may result in the formation of deacetoxy-type alkaloids.[1] The specific degradation products will depend on the stress conditions applied.

Q4: Which analytical techniques are suitable for monitoring the stability of Carmichaeline E?

A4: High-Performance Liquid Chromatography (HPLC) coupled with Mass Spectrometry (MS), particularly with an electrospray ionization (ESI) source, is a powerful technique for stability studies of diterpenoid alkaloids.[1][2] This method allows for the separation and identification of the parent compound and its degradation products.

Troubleshooting Guide

© 2026 BenchChem. All rights reserved.

Issue	Possible Cause	Recommended Solution
Rapid loss of Carmichaeline E in solution	High pH of the solvent or buffer: Diterpenoid alkaloids can be unstable in alkaline conditions.[1]	Check the pH of your solution. For storage, consider using a slightly acidic or neutral buffer (pH 4-7).
Inappropriate solvent: Some solvents can promote degradation.	For short-term storage, consider using solvents like methanol or distilled water. For longer-term, lyophilization might be necessary.[1]	
Elevated temperature: Heat can accelerate degradation through pyrolysis.[1]	Store stock solutions and samples at refrigerated (2-8 °C) or frozen (-20 °C or lower) temperatures. Avoid repeated freeze-thaw cycles.	
Appearance of unexpected peaks in chromatogram	Degradation of Carmichaeline E: New peaks likely represent degradation products.	Perform a forced degradation study (see experimental protocols below) to identify potential degradation products and their retention times. Use HPLC-MS/MS to elucidate the structures of these new peaks. [1]
Contamination: The sample or solvent may be contaminated.	Prepare fresh solutions with high-purity solvents and analyze a blank to rule out contamination.	
Inconsistent analytical results	Sample instability during analysis: The compound may be degrading in the autosampler.	Use a cooled autosampler (e.g., 4 °C) to minimize degradation during the analytical run.

© 2026 BenchChem. All rights reserved.

Photodegradation: Exposure to light can cause degradation.	Protect samples from light by using amber vials or covering them with aluminum foil.

Quantitative Data Summary

The following table presents hypothetical stability data for a generic C19 diterpenoid alkaloid, "Compound X," which is structurally similar to Carmichaeline E. This data is for illustrative purposes and is based on the general stability behavior of this class of compounds.

© 2026 BenchChem. All rights reserved.

Condition	Time (hours)	Compound X Remaining (%)	Major Degradant 1 (%)	Major Degradant 2 (%)
pH 3 (40°C)	0	100	0	0
	24	95.2	2.1	1.5
	48	90.8	4.3	3.2
pH 7 (40°C)	0	100	0	0
	24	92.1	3.5	2.8
	48	85.3	6.9	5.1
pH 10 (40°C)	0	100	0	0
	24	75.4	15.2	8.3
	48	58.9	28.7	11.6
Methanol (25°C)	0	100	0	0
	24	99.5	<0.5	<0.5
	48	99.1	<0.5	<0.5
Aqueous Solution (25°C, protected from light)	0	100	0	0
	24	98.2	0.8	0.6
	48	96.5	1.6	1.2

Experimental Protocols

Protocol 1: Forced Degradation Study of Carmichaeline E

Objective: To identify potential degradation products and pathways of Carmichaeline E under various stress conditions.

© 2026 BenchChem. All rights reserved.

Materials:

- Carmichaeline E reference standard
- Hydrochloric acid (HCl), 0.1 N
- Sodium hydroxide (NaOH), 0.1 N
- Hydrogen peroxide (H_2O_2), 3%
- Methanol (HPLC grade)
- Water (HPLC grade)
- pH meter
- HPLC-UV/MS system

Methodology:

- Stock Solution Preparation: Prepare a stock solution of Carmichaeline E in methanol at a concentration of 1 mg/mL.
- Acid Hydrolysis: Mix 1 mL of the stock solution with 1 mL of 0.1 N HCl. Incubate at 60°C for 24 hours. Neutralize with 0.1 N NaOH before analysis.
- Base Hydrolysis: Mix 1 mL of the stock solution with 1 mL of 0.1 N NaOH. Incubate at 60°C for 2 hours. Neutralize with 0.1 N HCl before analysis.
- Oxidative Degradation: Mix 1 mL of the stock solution with 1 mL of 3% H_2O_2. Keep at room temperature for 24 hours, protected from light.
- Thermal Degradation: Place a solid sample of Carmichaeline E in an oven at 80°C for 48 hours. Dissolve in methanol for analysis.
- Photodegradation: Expose a solution of Carmichaeline E (in a quartz cuvette) to a photostability chamber (ICH Q1B conditions) for a specified duration.

© 2026 BenchChem. All rights reserved.

- Analysis: Analyze all stressed samples, along with a control sample (stock solution diluted with methanol/water), by a validated stability-indicating HPLC-MS method.

Protocol 2: HPLC-MS Method for Stability Analysis

- Column: C18 reverse-phase column (e.g., 4.6 x 150 mm, 5 µm)
- Mobile Phase A: 0.1% Formic acid in water
- Mobile Phase B: 0.1% Formic acid in acetonitrile
- Gradient: 10-90% B over 30 minutes
- Flow Rate: 1.0 mL/min
- Column Temperature: 30°C
- Injection Volume: 10 µL
- Detection: UV at 230 nm and MS in positive ESI mode
- MS Scan Range: m/z 100-1000

Visualizations

© 2026 BenchChem. All rights reserved.

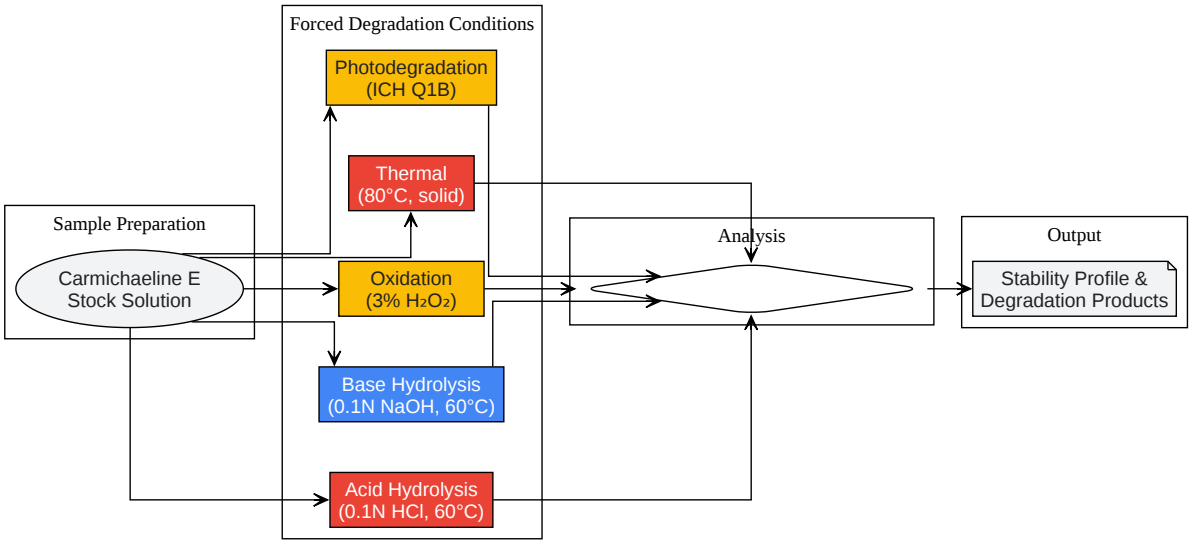

© 2026 BenchChem. All rights reserved.

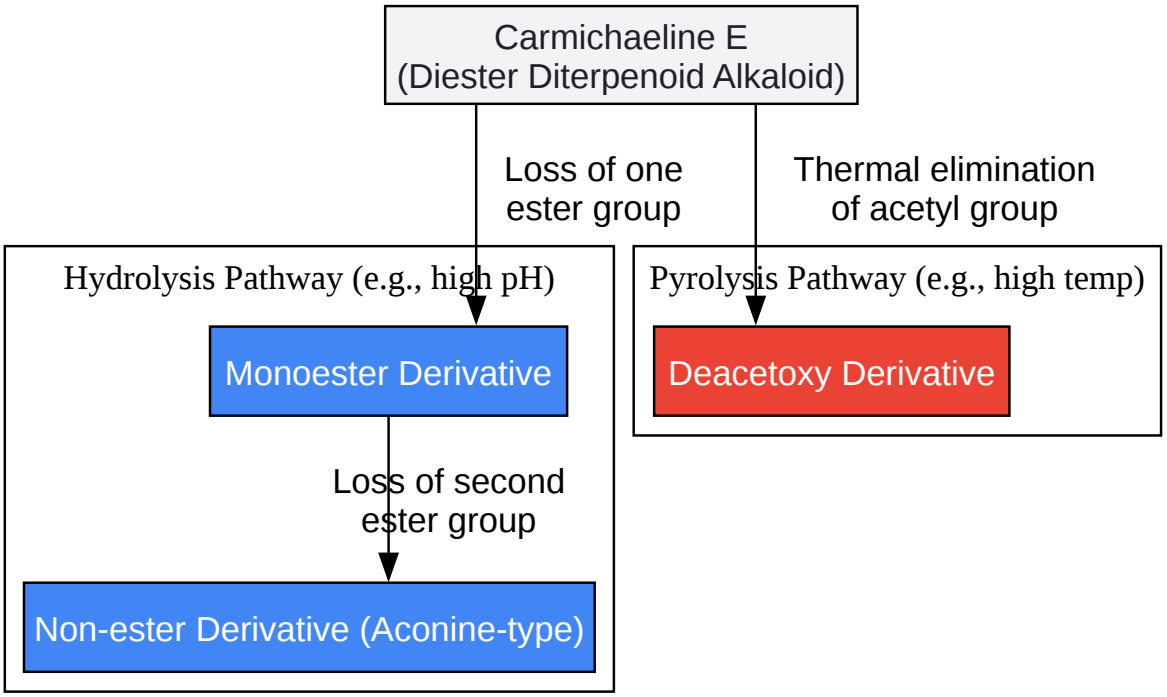

Click to download full resolution via product page

Need Custom Synthesis?

BenchChem offers custom synthesis for rare earth carbides and specific isotopiclabeling.

Email: info@benchchem.com or Request Quote Online.

References

- 1. Studies on the stability of diester-diterpenoid alkaloids from the genus Aconitum L. by high performance liquid chromatography combined with electrospray ionisation tandem mass spectrometry (HPLC/ESI/MSn) - PubMed [pubmed.ncbi.nlm.nih.gov]
- 2. Targeted Enrichment and Characterization of Diester Diterpenoid Alkaloids in Aconitum Herbs Using Gas–Liquid Microextraction Coupled with High-Resolution Mass Spectrometry - PMC [pmc.ncbi.nlm.nih.gov]
- To cite this document: BenchChem. [Technical Support Center: Carmichaeline E Stability and Degradation]. BenchChem, [2026]. [Online PDF]. Available at: [https://www.benchchem.com/product/b15594935/docs#technical-support-center-carmichaeline-e-stability-and-degradation]

© 2026 BenchChem. All rights reserved.

Disclaimer & Data Validity:

The information provided in this document is for Research Use Only (RUO) and is strictly not intended for diagnostic or therapeutic procedures. While BenchChem strives to provide accurate protocols, we make no warranties, express or implied, regarding the fitness of this product for every specific experimental setup.

Technical Support: The protocols provided are for reference purposes. Unsure if this reagent suits your experiment?

Need Industrial/Bulk Grade? Request Custom Synthesis Quote

BenchChem

Our mission is to be the trusted global source of essential and advanced chemicals, empowering scientists and researchers to drive progress in science and industry.

Contact

Address: 3281 E Guasti Rd

Ontario, CA 91761, United States

Phone: (601) 213-4426

Email: info@benchchem.com

Contact our Ph.D. Support Team for a compatibility check

© 2026 BenchChem. All rights reserved.