Technical Support Center: IR-58 Signal Overlapping with Other Fluorophores

Author: BenchChem Technical Support Team. **Date**: April 2026

Compound of Interest

Compound Name:	*IR-58*
Cat. No.:	*B15581908*

Get Quote

This technical support guide is designed for researchers, scientists, and drug development professionals who are encountering issues with signal overlapping when using the near-infrared (NIR) fluorophore **IR-58** in their experiments. This guide provides troubleshooting steps, frequently asked questions, and detailed experimental protocols to help you identify and resolve spectral bleed-through issues.

Frequently Asked Questions (FAQs)

Q1: What is spectral overlap or bleed-through?

A1: Spectral overlap, also known as bleed-through or crosstalk, occurs in fluorescence microscopy when the emission signal from one fluorophore is detected in the channel designated for another fluorophore.[1][2][3] This happens because fluorophores often have broad emission spectra, and the tail of one fluorophore's emission can extend into the detection window of a neighboring channel.[1][2] This can lead to false-positive signals and inaccurate colocalization analysis.[1]

Q2: I am observing a signal in my far-red channel that seems to correlate with my **IR-58** signal. Is this spectral bleed-through?

© 2026 BenchChem. All rights reserved.

A2: It is highly probable that you are observing spectral bleed-through. To confirm this, you should prepare a control sample stained only with **IR-58** and image it using both your **IR-58** channel and the suspect far-red channel. If you detect a signal in the far-red channel from this single-stained sample, it confirms spectral bleed-through from **IR-58**.

Q3: How can I minimize or prevent spectral bleed-through during image acquisition?

A3: There are several strategies to minimize spectral bleed-through:

- Sequential Scanning: In confocal microscopy, acquiring images for each channel sequentially, rather than simultaneously, is a very effective method. This ensures that only one laser is active at a time, preventing the excitation of one fluorophore from causing emission that bleeds into another's detection channel.[1]
- Judicious Fluorophore Selection: Choose fluorophores with well-separated emission spectra to minimize overlap.[1][4]
- Optimized Filter Selection: Use emission filters with narrower bandwidths that are specifically tailored to the emission peak of your target fluorophore.[1]
- Lower Laser Power and Detector Gain: Adjusting the laser power and detector gain can help reduce bleed-through, especially if the signal in one channel is significantly brighter than in another.[1]

Q4: Can I correct for spectral bleed-through after image acquisition?

A4: Yes, computational methods can be used to correct for spectral bleed-through. The most common method is spectral unmixing. This involves acquiring a reference emission spectrum for each fluorophore in your sample individually. These reference spectra are then used by software algorithms to calculate and subtract the contribution of bleed-through from each channel in your multiplexed image.

Quantitative Data Presentation: Fluorophore Spectral Overlap

To effectively troubleshoot signal overlap, it is crucial to understand the spectral properties of the fluorophores in your experiment. The table below provides the approximate excitation and

© 2026 BenchChem. All rights reserved.

emission maxima for **IR-58** and other common fluorophores that may be used in conjunction and could lead to spectral overlap.

Fluorophore	Excitation Max (nm)	Emission Max (nm)	Potential for Overlap with IR-58
IR-58	~758	~780	N/A
Alexa Fluor 750	749	775	High
Cy7	750	776	High
DyLight 755	752	776	High
Alexa Fluor 647	650	668	Low to Moderate
Cy5	649	670	Low to Moderate
Allophycocyanin (APC)	650	660	Low

Experimental Protocols

Protocol 1: Determining Spectral Bleed-Through

Objective: To empirically determine the extent of spectral bleed-through from **IR-58** into other detection channels.

Materials:

- Your biological sample
- **IR-58** conjugated antibody or probe
- Mounting medium
- Fluorescence microscope with configurable filter sets and/or spectral detector

Methodology:

© 2026 BenchChem. All rights reserved.

- Prepare Single-Stained Control Samples: Prepare a separate sample stained only with **IR-58**. Also, prepare single-stained samples for every other fluorophore in your multiplex panel.
- Image **IR-58** Control:
  - Place the **IR-58**-only sample on the microscope.
  - Using the laser line appropriate for **IR-58** (e.g., 750 nm), acquire an image in the **IR-58** detection channel. Adjust the laser power and detector gain to obtain a strong, but not saturated, signal.
  - Crucially, without changing the acquisition settings for the **IR-58** channel, sequentially acquire images in all other channels of your experiment (e.g., the Cy5/Alexa Fluor 647 channel).
- Analyze Bleed-Through:
  - Examine the images acquired in the other channels. Any signal detected in these channels from the **IR-58**-only sample represents bleed-through.
  - Quantify the percentage of bleed-through by comparing the mean fluorescence intensity in the bleed-through channel to the mean fluorescence intensity in the primary channel.
- Repeat for Other Fluorophores: Repeat steps 2 and 3 for each of your other single-stained control samples to assess their bleed-through into the **IR-58** channel and other channels.

Visualizations

© 2026 BenchChem. All rights reserved.

Conceptual Diagram of Spectral Overlap

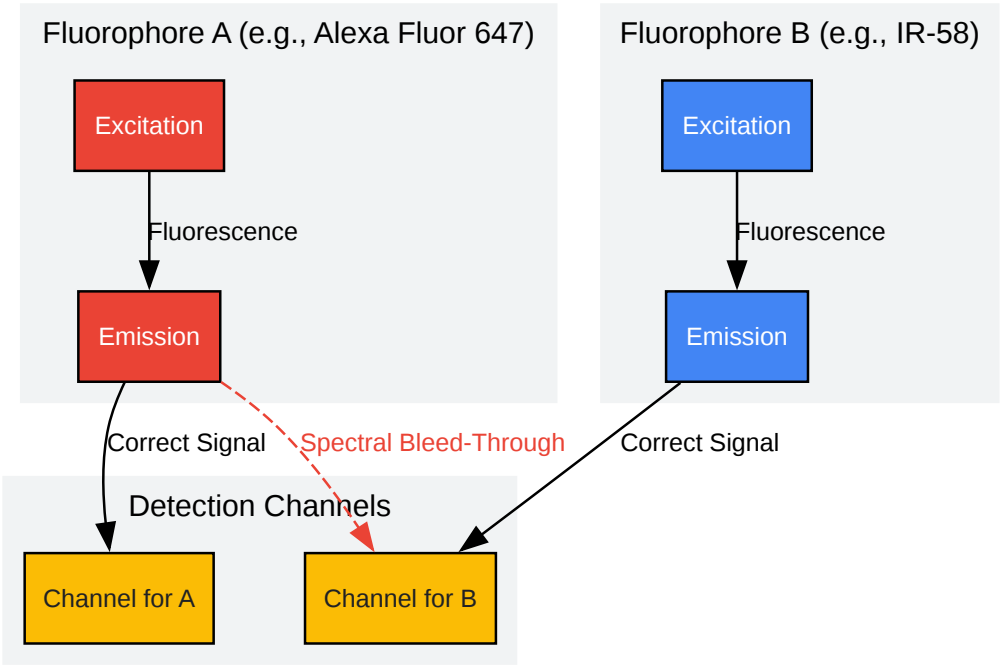

Click to download full resolution via product page

Caption: Spectral overlap of two fluorophores.

© 2026 BenchChem. All rights reserved.

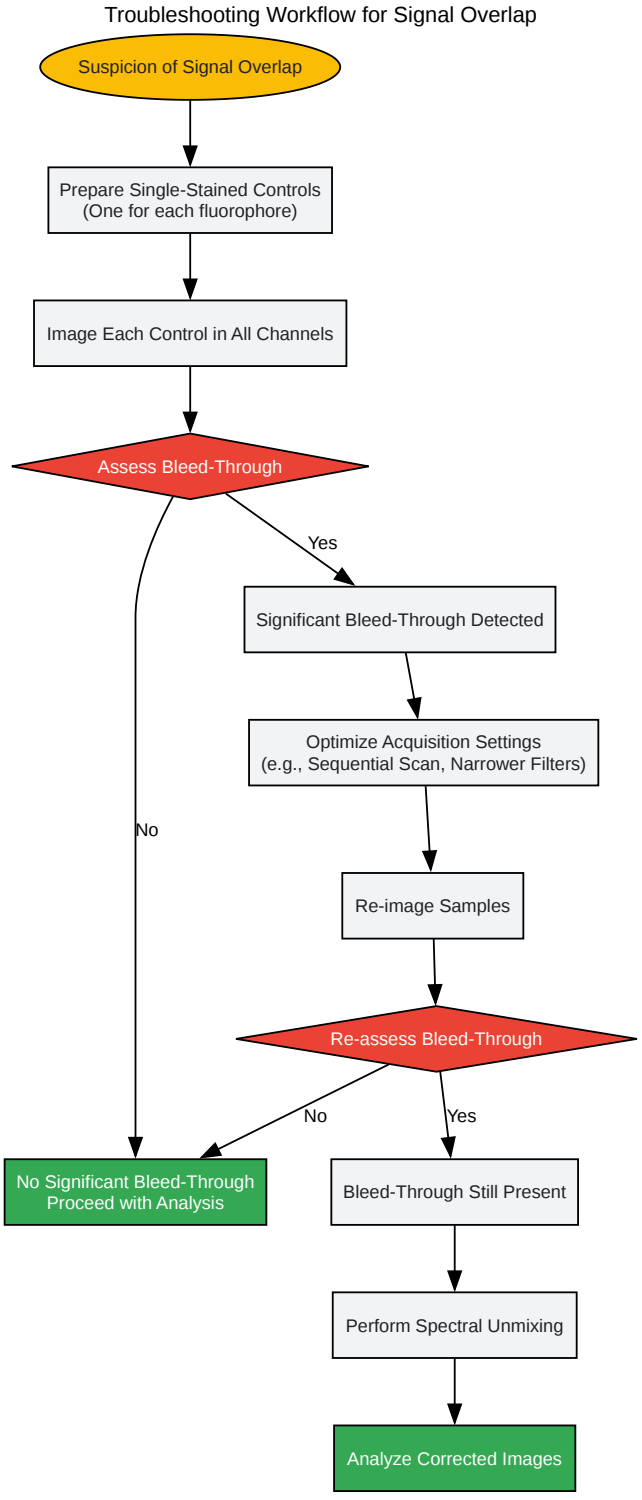

Click to download full resolution via product page

© 2026 BenchChem. All rights reserved.

Need Custom Synthesis?

BenchChem offers custom synthesis for rare earth carbides and specific isotopiclabeling.

Email: info@benchchem.com or Request Quote Online.

References

- 1. benchchem.com [benchchem.com]
- 2. Spectral Bleed-Through Artifacts in Confocal Microscopy [evidentscientific.com]
- 3. BleedThrough | Scientific Volume Imaging [svi.nl]
- 4. Bleed-Through in Fluorescence Imaging | Thermo Fisher Scientific - US [thermofisher.com]
- To cite this document: BenchChem. [Technical Support Center: IR-58 Signal Overlapping with Other Fluorophores]. BenchChem, [2026]. [Online PDF]. Available at: [https://www.benchchem.com/product/b15581908/docs#technical-support-center-ir-58-signal-overlapping-with-other-fluorophores]

Disclaimer & Data Validity:

The information provided in this document is for Research Use Only (RUO) and is strictly not intended for diagnostic or therapeutic procedures. While BenchChem strives to provide accurate protocols, we make no warranties, express or implied, regarding the fitness of this product for every specific experimental setup.

Technical Support: The protocols provided are for reference purposes. Unsure if this reagent suits your experiment?

Need Industrial/Bulk Grade? Request Custom Synthesis Quote

© 2026 BenchChem. All rights reserved.

BenchChem

Our mission is to be the trusted global source of essential and advanced chemicals, empowering scientists and researchers to drive progress in science and industry.

Contact

Address: 3281 E Guasti Rd

Ontario, CA 91761, United States

Phone: (601) 213-4426

Email: info@benchchem.com

Contact our Ph.D. Support Team for a compatibility check

© 2026 BenchChem. All rights reserved.