# Technical Support Center: Overcoming Resistance to Segigratinib Hydrochloride in Cancer Cells

**Author**: BenchChem Technical Support Team. **Date**: April 2026

| *Compound of Interest* | |
|---|---|
| *Compound Name:* | *Segigratinib hydrochloride* |
| *CAS No.:* | *2847066-15-1* |
| *Cat. No.:* | *B15579901* |

*Get Quote*

This technical support center provides troubleshooting guides and frequently asked questions (FAQs) for researchers, scientists, and drug development professionals working with **Segigratinib hydrochloride**. The information is designed to address specific issues that may be encountered during experiments aimed at understanding and overcoming resistance to this dual FGFR/CSF1R inhibitor.

## Frequently Asked Questions (FAQs)

Q1: What is the mechanism of action of **Segigratinib hydrochloride**?

**Segigratinib hydrochloride** (also known as 3D185) is a potent, orally bioavailable small molecule inhibitor that simultaneously targets fibroblast growth factor receptors (FGFR1, FGFR2, and FGFR3) and colony-stimulating factor 1 receptor (CSF1R).[1][2] Its dual action is designed to both directly inhibit the proliferation of cancer cells dependent on aberrant FGFR signaling and modulate the tumor microenvironment by targeting tumor-associated macrophages (TAMs), which rely on CSF1R signaling for their survival and pro-tumor functions.

© 2026 BenchChem. All rights reserved.

[1][2] This dual targeting is expected to produce synergistic antitumor effects and potentially delay the onset of drug resistance.[1]

Q2: What are the known molecular targets of Segigratinib?

Preclinical studies have demonstrated that Segigratinib (3D185) significantly inhibits the kinase activity of FGFR1, FGFR2, FGFR3, and CSF-1R with high selectivity and potency.[1][2]

Q3: My cancer cell line shows intrinsic resistance to Segigratinib. What are the possible reasons?

Intrinsic resistance to Segigratinib can occur if the cancer cells are not dependent on FGFR signaling for their proliferation and survival. Other potential, though not yet clinically validated for Segigratinib, mechanisms of intrinsic resistance to tyrosine kinase inhibitors include the pre-existence of mutations that prevent effective drug binding or the activation of alternative signaling pathways that bypass the need for FGFR signaling.[3][4]

Q4: My cancer cell line initially responded to Segigratinib but has now developed acquired resistance. What are the likely mechanisms?

While specific acquired resistance mechanisms to Segigratinib have not yet been reported in clinical trials, based on data from other pan-FGFR inhibitors, several mechanisms are plausible:

- On-target secondary mutations: The development of new mutations in the FGFR kinase domain can prevent Segigratinib from binding effectively. Common mutations in FGFR2, for instance, occur at the "gatekeeper" residue (V565) or the "molecular brake" (N550).[5][6][7]
- Bypass signaling pathway activation: Cancer cells can develop resistance by upregulating other signaling pathways to maintain proliferation and survival, even when FGFR is inhibited. Commonly implicated pathways include PI3K/AKT/mTOR and MAPK.[3][5][7] Activation of other receptor tyrosine kinases, such as EGFR or MET, can also contribute to resistance.[3][8]
- Tumor microenvironment-mediated resistance: Since Segigratinib also targets CSF1R, changes in the tumor microenvironment could contribute to resistance. For example, other immune cells or cancer-associated fibroblasts might produce survival factors. In the context

© 2026 BenchChem. All rights reserved.

of CSF1R inhibition, macrophage-derived IGF-1 has been shown to activate the PI3K pathway in tumor cells, leading to resistance.[9][10][11]

# Troubleshooting Guides

## Issue 1: Decreased Sensitivity to Segigratinib in Cell Culture

| Potential Cause | Troubleshooting Steps |
|---|---|
| Development of secondary FGFR mutations | 1. Sequence the FGFR kinase domain in your resistant cell line to identify potential mutations. Compare the sequence to the parental, sensitive cell line. 2. Test next-generation FGFR inhibitors. Some newer inhibitors are designed to overcome common resistance mutations.[5][12] 3. Consider combination therapy with an agent that targets a downstream effector, such as a MEK or PI3K inhibitor. |
| Activation of bypass signaling pathways | 1. Perform phosphoproteomic or immunoblot analysis to assess the activation status of key signaling pathways (e.g., p-AKT, p-ERK, p-mTOR) in resistant versus sensitive cells. 2. Test combination therapies with inhibitors of the identified activated pathway (e.g., PI3K inhibitors like BKM120, or mTOR inhibitors like everolimus).[5][10] 3. Evaluate for upregulation of other receptor tyrosine kinases (e.g., EGFR, MET) by qPCR or immunoblotting. |

## Issue 2: Suboptimal Antitumor Efficacy in In Vivo Models

© 2026 BenchChem. All rights reserved.

| Potential Cause | Troubleshooting Steps |
|---|---|
| Poor drug exposure | 1. Verify the formulation and administration route of Segigratinib. 2. Perform pharmacokinetic analysis to measure drug concentration in plasma and tumor tissue. |
| Tumor microenvironment-mediated resistance | 1. Analyze the immune cell infiltrate in treated and untreated tumors by flow cytometry or immunohistochemistry to assess the impact on TAMs and other immune cells.[1] 2. Investigate the role of other stromal cells, such as cancer-associated fibroblasts, which may contribute to resistance.[13] 3. Consider combination immunotherapy, such as with an immune checkpoint inhibitor, to enhance the anti-tumor immune response.[11] |
| Hypoxia | 1. Assess the level of hypoxia in your tumor model, as it can contribute to resistance to various therapies.[14][15] 2. Consider therapies that target hypoxic cells in combination with Segigratinib.[15] |

# Data Presentation

Table 1: In Vitro Antiproliferative Activity of Segigratinib (3D185)

© 2026 BenchChem. All rights reserved.

| Cell Line | Cancer Type | FGFR Alteration | CSF1R Status | IC50 (nM) |
|---|---|---|---|---|
| SNU16 | Gastric Cancer | FGFR2 Amplification | - | 1.8 ± 0.5 |
| NCI-H1581 | Lung Cancer | FGFR1 Amplification | - | 1.1 ± 0.3 |
| KG1 | Acute Myeloid Leukemia | FGFR1 Fusion | - | 0.9 ± 0.2 |
| UM-UC-14 | Bladder Cancer | FGFR3 S249C | - | 36.8 ± 7.3 |
| M-NFS-60 | Myeloid Leukemia | - | CSF1R-dependent | 1.2 ± 0.2 |

Data extracted from a preclinical study of 3D185.[16]

Table 2: In Vivo Antitumor Efficacy of Segigratinib (3D185) in Xenograft Models

| Xenograft Model | Cancer Type | FGFR Alteration | Treatment Group (mg/kg) | Tumor Growth Inhibition Rate (%) |
|---|---|---|---|---|
| NCI-H1581 | Lung Cancer | FGFR1 Amplification | 12.5 | 60.4 |
| 25 | 74.9 | | | |
| 50 | 96.4 | | | |
| SNU16 | Gastric Cancer | FGFR2 Amplification | 12.5 | Not specified, but significant |
| 25 | Not specified, but significant | | | |
| 50 | Not specified, but significant | | | |

© 2026 BenchChem. All rights reserved.

Data extracted from a preclinical study of 3D185.[1][17]

# Experimental Protocols

1. Cell Viability Assay

- Objective: To determine the half-maximal inhibitory concentration (IC50) of Segigratinib.
- Methodology:
  - Seed cancer cells in 96-well plates and allow them to adhere overnight.
  - Treat the cells with a serial dilution of **Segigratinib hydrochloride** for the desired duration (e.g., 72 hours).
  - Assess cell viability using a commercially available assay, such as CellTiter-Glo® Luminescent Cell Viability Assay or MTT assay, according to the manufacturer's instructions.
  - Calculate the IC50 values by fitting the dose-response data to a nonlinear regression model.

2. Immunoblotting for Signaling Pathway Analysis

- Objective: To assess the phosphorylation status of key proteins in the FGFR and CSF1R signaling pathways.
- Methodology:
  - Treat cells with Segigratinib at various concentrations for a specified time (e.g., 2 hours).
  - Lyse the cells in RIPA buffer supplemented with protease and phosphatase inhibitors.
  - Determine protein concentration using a BCA assay.
  - Separate equal amounts of protein by SDS-PAGE and transfer to a PVDF membrane.

© 2026 BenchChem. All rights reserved.

- Block the membrane and incubate with primary antibodies against total and phosphorylated forms of target proteins (e.g., FGFR, ERK, AKT, PLCγ).
- Incubate with HRP-conjugated secondary antibodies and visualize using an enhanced chemiluminescence (ECL) detection system.

3. In Vivo Xenograft Studies

- Objective: To evaluate the antitumor efficacy of Segigratinib in a preclinical animal model.
- Methodology:
  - Subcutaneously implant cancer cells into the flank of immunodeficient mice (e.g., nude mice).
  - When tumors reach a palpable size, randomize the mice into vehicle control and treatment groups.
  - Administer Segigratinib or vehicle orally at the desired dose and schedule.
  - Measure tumor volume and body weight regularly.
  - At the end of the study, euthanize the mice and excise the tumors for weight measurement and further analysis (e.g., immunohistochemistry for proliferation markers like Ki67).

# Visualizations

© 2026 BenchChem. All rights reserved.

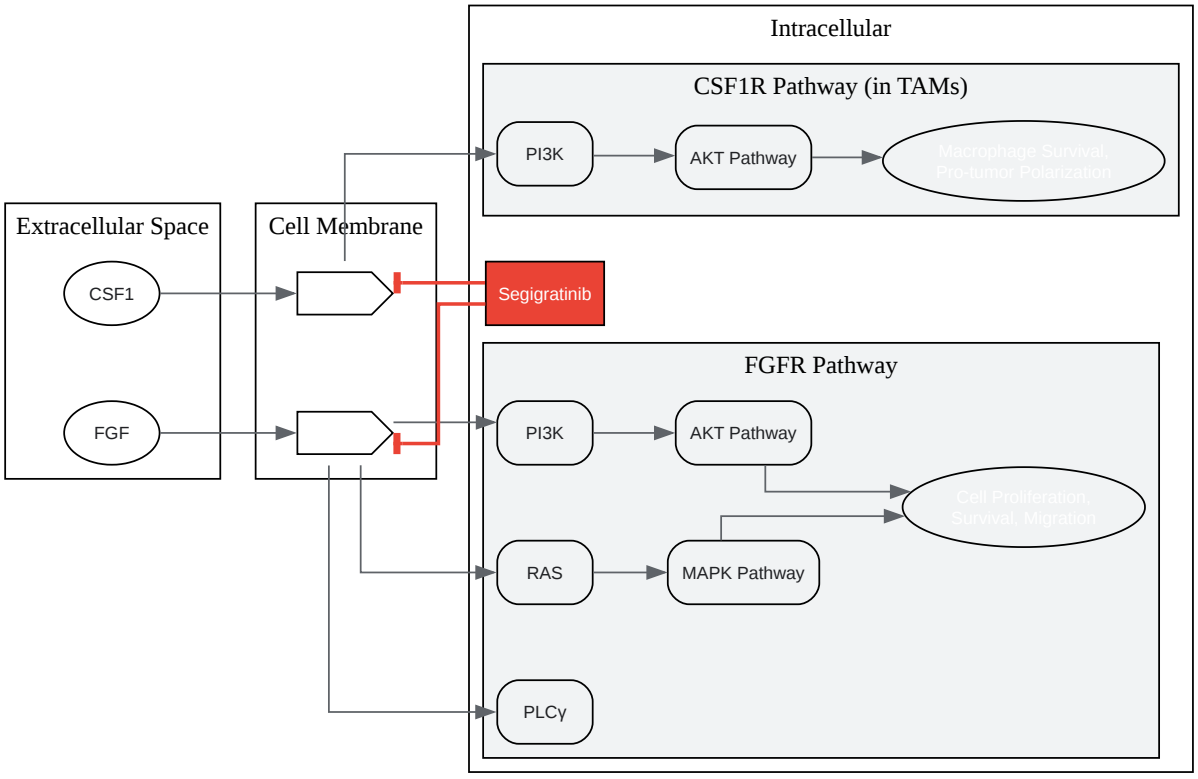


Click to download full resolution via product page

Caption: Dual inhibitory mechanism of Segigratinib on FGFR and CSF1R pathways.

© 2026 BenchChem. All rights reserved.

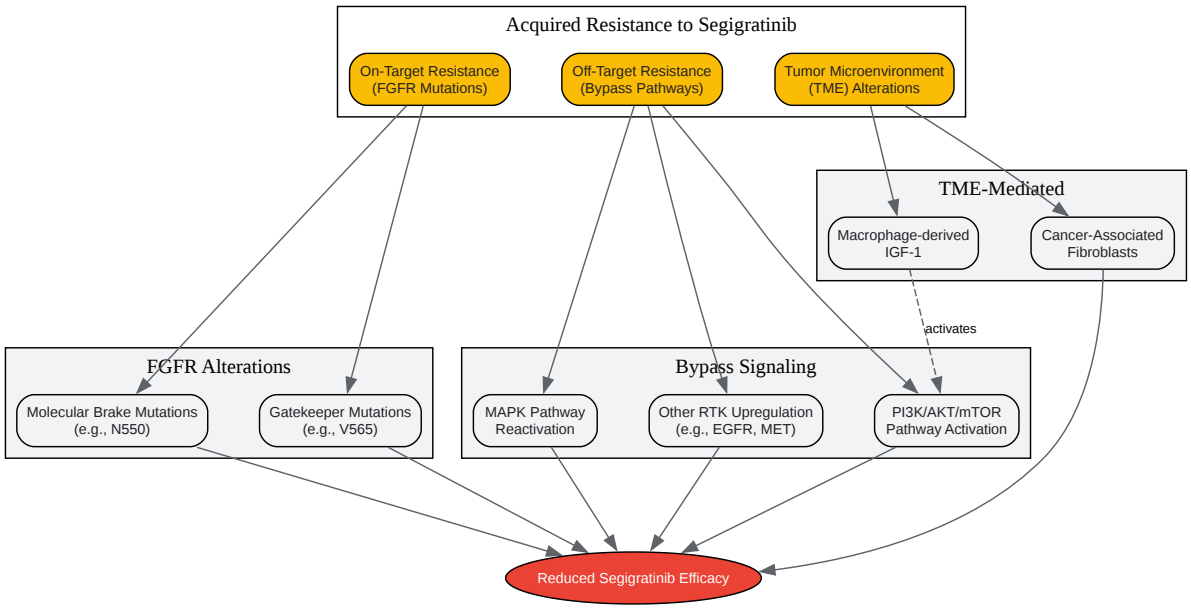


Click to download full resolution via product page

Caption: Potential mechanisms of acquired resistance to Segigratinib.

Caption: Experimental workflow for investigating Segigratinib resistance.

***Need Custom Synthesis?***

*BenchChem offers custom synthesis for rare earth carbides and specific isotopiclabeling.*

*Email: info@benchchem.com or Request Quote Online.*

# References


- 1. Preclinical evaluation of 3D185, a novel potent inhibitor of FGFR1/2/3 and CSF-1R, in FGFR-dependent and macrophage-dominant cancer models - PMC [pmc.ncbi.nlm.nih.gov]
- 2. Preclinical evaluation of 3D185, a novel potent inhibitor of FGFR1/2/3 and CSF-1R, in FGFR-dependent and macrophage-dominant cancer models - PubMed [pubmed.ncbi.nlm.nih.gov]
- 3. oaepublish.com [oaepublish.com]
- 4. researchgate.net [researchgate.net]
- 5. aacrjournals.org [aacrjournals.org]
- 6. Landscape of Clinical Resistance Mechanisms to FGFR Inhibitors in FGFR2-Altered Cholangiocarcinoma - PMC [pmc.ncbi.nlm.nih.gov]
- 7. researchgate.net [researchgate.net]
- 8. Bypass Mechanisms of Resistance to Receptor Tyrosine Kinase Inhibition in Lung Cancer - PMC [pmc.ncbi.nlm.nih.gov]
- 9. aacrjournals.org [aacrjournals.org]
- 10. aacrjournals.org [aacrjournals.org]
- 11. jitc.bmj.com [jitc.bmj.com]
- 12. onclive.com [onclive.com]
- 13. Clinical Development of Colony-Stimulating Factor 1 Receptor (CSF1R) Inhibitors - PMC [pmc.ncbi.nlm.nih.gov]
- 14. Progress toward overcoming hypoxia-induced resistance to solid tumor therapy - PMC [pmc.ncbi.nlm.nih.gov]
- 15. Hypoxia is linked to acquired resistance to immune checkpoint inhibitors in lung cancer - PubMed [pubmed.ncbi.nlm.nih.gov]
- 16. researchgate.net [researchgate.net]
- 17. researchgate.net [researchgate.net]


- To cite this document: BenchChem. [Technical Support Center: Overcoming Resistance to Segigratinib Hydrochloride in Cancer Cells]. BenchChem, [2026]. [Online PDF]. Available at: [https://www.benchchem.com/product/b15579901/docs#technical-support-center-overcoming-resistance-to-segigratinib-hydrochloride-in-cancer-cells]

© 2026 BenchChem. All rights reserved.

**Disclaimer & Data Validity:**

The information provided in this document is for Research Use Only (RUO) and is strictly not intended for diagnostic or therapeutic procedures. While BenchChem strives to provide accurate protocols, we make no warranties, express or implied, regarding the fitness of this product for every specific experimental setup.

**Technical Support:**The protocols provided are for reference purposes. Unsure if this reagent suits your experiment?

**Need Industrial/Bulk Grade?** Request Custom Synthesis Quote

# BenchChem

Our mission is to be the trusted global source of essential and advanced chemicals, empowering scientists and researchers to drive progress in science and industry.

Contact

Address: 3281 E Guasti Rd

Ontario, CA 91761, United States

Phone: (601) 213-4426

Email: info@benchchem.com

Contact our Ph.D. Support Team for a compatibility check

© 2026 BenchChem. All rights reserved.