Technical Support Center: Optimizing Aldose Reductase-IN-3 Concentration in Assays

Author: BenchChem Technical Support Team. **Date**: April 2026

Compound of Interest

Compound Name:	*Aldose reductase-IN-3*
Cat. No.:	*B15574130*

Get Quote

This technical support center provides researchers, scientists, and drug development professionals with comprehensive guidance on optimizing the concentration of "**Aldose reductase-IN-3**" in various experimental assays.

Frequently Asked Questions (FAQs)

Q1: What is **Aldose Reductase-IN-3** and what is its primary mechanism of action?

A1: **Aldose reductase-IN-3** is an inhibitor of the enzyme aldose reductase. Aldose reductase is the first and rate-limiting enzyme in the polyol pathway of glucose metabolism.[1] Under normal glycemic conditions, this pathway is a minor route for glucose utilization.[2] However, in hyperglycemic states, such as diabetes, the increased flux of glucose through the polyol pathway leads to the accumulation of sorbitol, which can cause osmotic stress and cellular damage, contributing to diabetic complications.[2][3] **Aldose reductase-IN-3** acts by binding to the aldose reductase enzyme, thereby preventing the conversion of glucose to sorbitol and mitigating the downstream pathological effects.

Q2: What is the typical starting concentration for **Aldose reductase-IN-3** in an in vitro assay?

© 2026 BenchChem. All rights reserved.

A2: For a novel or uncharacterized inhibitor like **Aldose reductase-IN-3**, a common starting point for an in vitro enzyme inhibition assay is a concentration range that spans several orders of magnitude around the expected IC50 value. If the IC50 is unknown, a wide screening concentration, for instance, 10 µM, is often used for initial testing.[3][4] Subsequent experiments should then involve a dose-response curve to determine the precise IC50.

Q3: How can I determine the optimal concentration of **Aldose reductase-IN-3** for my cell-based assay?

A3: The optimal concentration in a cell-based assay depends on factors like cell permeability, compound stability, and off-target effects. It is recommended to perform a dose-response experiment starting with a concentration around the in vitro IC50 value and titrating down. Cellular assays for aldose reductase activity can measure the intracellular accumulation of sorbitol or directly measure enzyme activity in cell lysates.[2] Monitoring both the desired inhibitory effect and any potential cytotoxicity (e.g., using an MTT or LDH assay) is crucial to identify a concentration that is both effective and non-toxic.

Q4: I am observing inconsistent results with **Aldose reductase-IN-3**. What are the potential causes?

A4: Inconsistent results can stem from several factors:

- Compound Solubility and Stability: Aldose reductase inhibitors can have solubility issues.[5] Ensure that **Aldose reductase-IN-3** is fully dissolved in the assay buffer. The stability of spirosuccinimide type aldose reductase inhibitors, for example, has been shown to be pH-dependent.[6] It is advisable to check the stability of your compound under your specific experimental conditions.
- Pipetting Errors: Use calibrated pipettes and proper techniques, especially for serial dilutions.
- Cell-Based Assay Variables: Inconsistent cell numbers, passage numbers, or cell health can lead to variability.
- Reagent Quality: Ensure all reagents, including the enzyme and substrate, are of high quality and have not undergone multiple freeze-thaw cycles.

© 2026 BenchChem. All rights reserved.

Troubleshooting Guide

© 2026 BenchChem. All rights reserved.

Problem	Possible Cause	Recommended Solution
No or low enzyme activity detected	Incorrect concentration of enzyme or substrates.	Refer to established protocols for recombinant human aldose reductase (rhAR) assays to ensure appropriate concentrations are used.[7]
Inactive enzyme.	Use a fresh batch of enzyme or test its activity with a known inhibitor as a positive control.	
High background signal in the assay	Contamination of reagents.	Use fresh, high-purity reagents.
Non-enzymatic degradation of NADPH.	Run a control reaction without the enzyme to measure the rate of non-enzymatic NADPH degradation and subtract this from your experimental values.	
Aldose reductase-IN-3 shows low potency (high IC50)	Poor compound solubility.	Test the solubility of Aldose reductase-IN-3 in the assay buffer. Consider using a different solvent or a solubilizing agent if compatible with the assay.
Compound degradation.	Assess the stability of Aldose reductase-IN-3 in the assay buffer over the time course of the experiment.	
High variability between replicate wells	Inconsistent pipetting.	Ensure proper mixing and use calibrated pipettes.
Edge effects in the microplate.	Avoid using the outer wells of the plate or fill them with buffer to maintain a humid environment.	

© 2026 BenchChem. All rights reserved.

Discrepancy between in vitro and cell-based assay results	Poor cell permeability of the inhibitor.	Evaluate the physicochemical properties of Aldose reductase-IN-3 (e.g., LogP) to predict permeability. Consider performing a permeability assay.
The compound is a substrate for efflux pumps.	Use cell lines that overexpress efflux pumps to test this possibility.	
The compound is rapidly metabolized.	Perform metabolic stability assays using liver microsomes or hepatocytes.	

Experimental Protocols

Protocol 1: In Vitro Aldose Reductase Enzyme Inhibition Assay

This protocol is adapted from standard colorimetric aldose reductase inhibitor screening kits.[4][8]

Materials:

- Recombinant human aldose reductase (rhAR)
- AR Assay Buffer
- NADPH
- Substrate (e.g., D,L-glyceraldehyde)
- **Aldose reductase-IN-3**
- DMSO (for dissolving the inhibitor)
- 96-well UV-transparent microplate

© 2026 BenchChem. All rights reserved.

- Microplate spectrophotometer

Procedure:

- Reagent Preparation:
  - Prepare AR Assay Buffer as per the manufacturer's instructions.
  - Reconstitute rhAR enzyme in AR Assay Buffer. Keep on ice.
  - Prepare a stock solution of NADPH in water.
  - Prepare a stock solution of the substrate in AR Assay Buffer.
  - Prepare a stock solution of **Aldose reductase-IN-3** in DMSO. Make serial dilutions in AR Assay Buffer to achieve the desired final concentrations.
- Assay Protocol:
  - Add the following to the wells of a 96-well plate:
    - Sample wells: 2-50 µL of **Aldose reductase-IN-3** dilutions.
    - Positive Control well: Assay buffer with no inhibitor.
    - Negative Control (No enzyme) well: Assay buffer.
  - Add rhAR enzyme to the sample and positive control wells.
  - Add NADPH solution to all wells.
  - Initiate the reaction by adding the substrate to all wells.
  - Immediately measure the absorbance at 340 nm in kinetic mode at 37°C for 60-90 minutes.[4]
- Data Analysis:
  - Calculate the rate of NADPH oxidation (decrease in absorbance at 340 nm) for each well.

© 2026 BenchChem. All rights reserved.

- Determine the percentage of inhibition for each concentration of **Aldose reductase-IN-3** compared to the positive control.
- Plot the percentage of inhibition against the inhibitor concentration and determine the IC50 value.

Protocol 2: Cell-Based Aldose Reductase Activity Assay

This protocol is based on the principle of measuring intracellular sorbitol accumulation.[2]

Materials:

- Cells cultured under high glucose conditions
- **Aldose reductase-IN-3**
- Cell lysis buffer
- Reagents for sorbitol measurement (e.g., a sorbitol assay kit)
- Protein assay kit (e.g., BCA)

Procedure:

- Cell Treatment:
  - Plate cells and allow them to adhere overnight.
  - Treat the cells with varying concentrations of **Aldose reductase-IN-3** in a high-glucose medium for a predetermined time (e.g., 24-48 hours). Include a vehicle control (e.g., DMSO).
- Cell Lysis:
  - Wash the cells with ice-cold PBS.
  - Lyse the cells using a suitable lysis buffer.
  - Centrifuge the lysate to pellet cell debris and collect the supernatant.

© 2026 BenchChem. All rights reserved.

- Sorbitol Measurement:
  - Measure the intracellular sorbitol concentration in the supernatant using a commercially available sorbitol assay kit, following the manufacturer's instructions.
- Protein Quantification:
  - Measure the total protein concentration in each lysate using a protein assay kit.
- Data Analysis:
  - Normalize the sorbitol concentration to the total protein concentration for each sample.
  - Calculate the percentage of inhibition of sorbitol accumulation for each concentration of **Aldose reductase-IN-3** compared to the vehicle control.
  - Plot the percentage of inhibition against the inhibitor concentration to determine the optimal effective concentration.

Visualizations

Signaling Pathway

© 2026 BenchChem. All rights reserved.

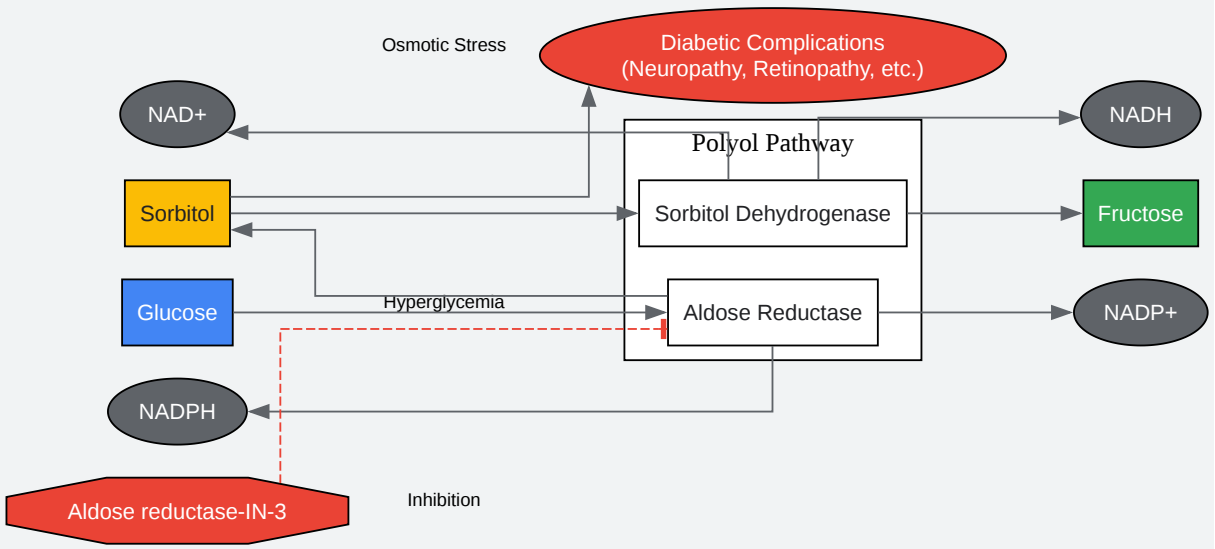

Click to download full resolution via product page

Caption: The Polyol Pathway and the inhibitory action of **Aldose reductase-IN-3**.

Experimental Workflow

© 2026 BenchChem. All rights reserved.

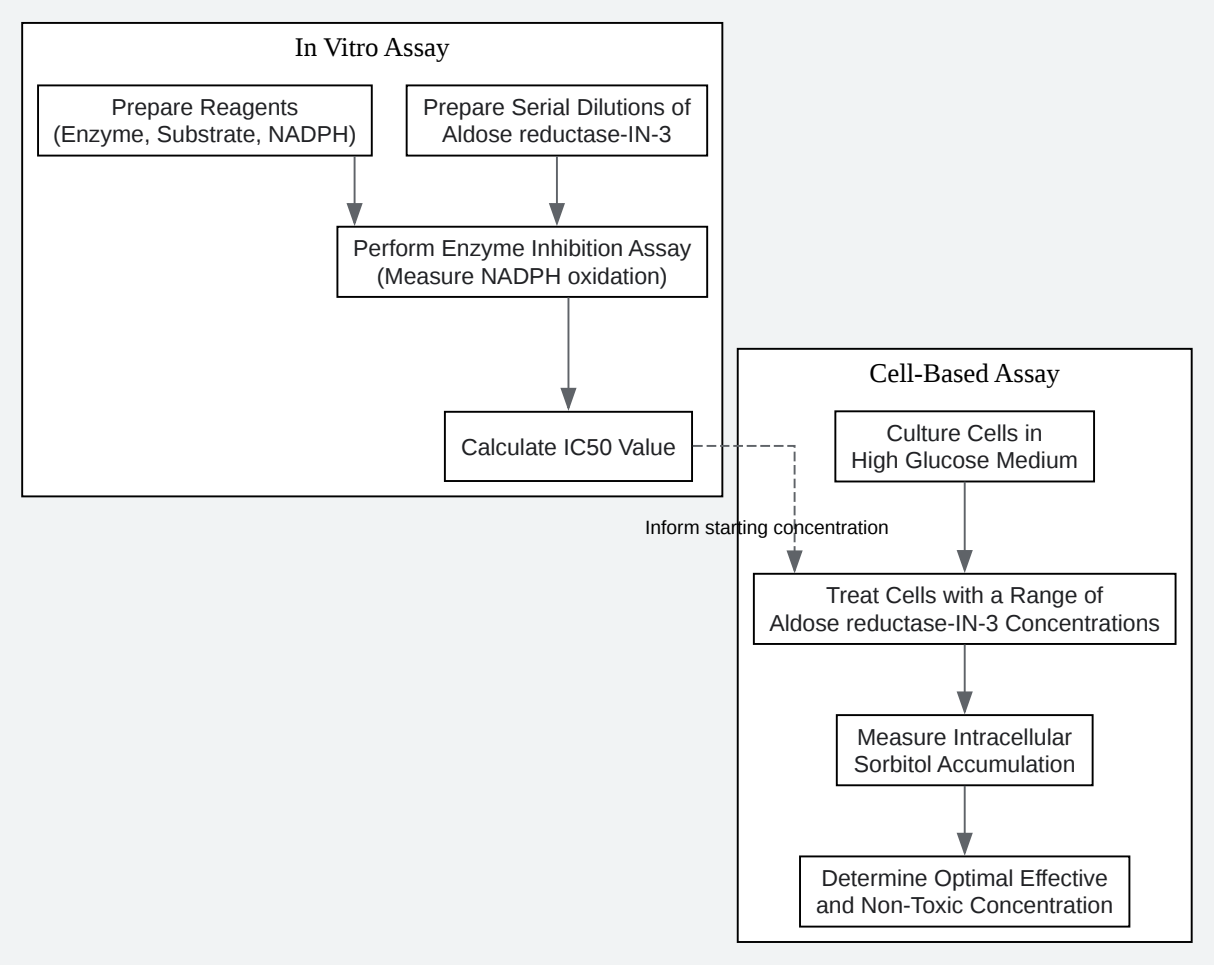

© 2026 BenchChem. All rights reserved.

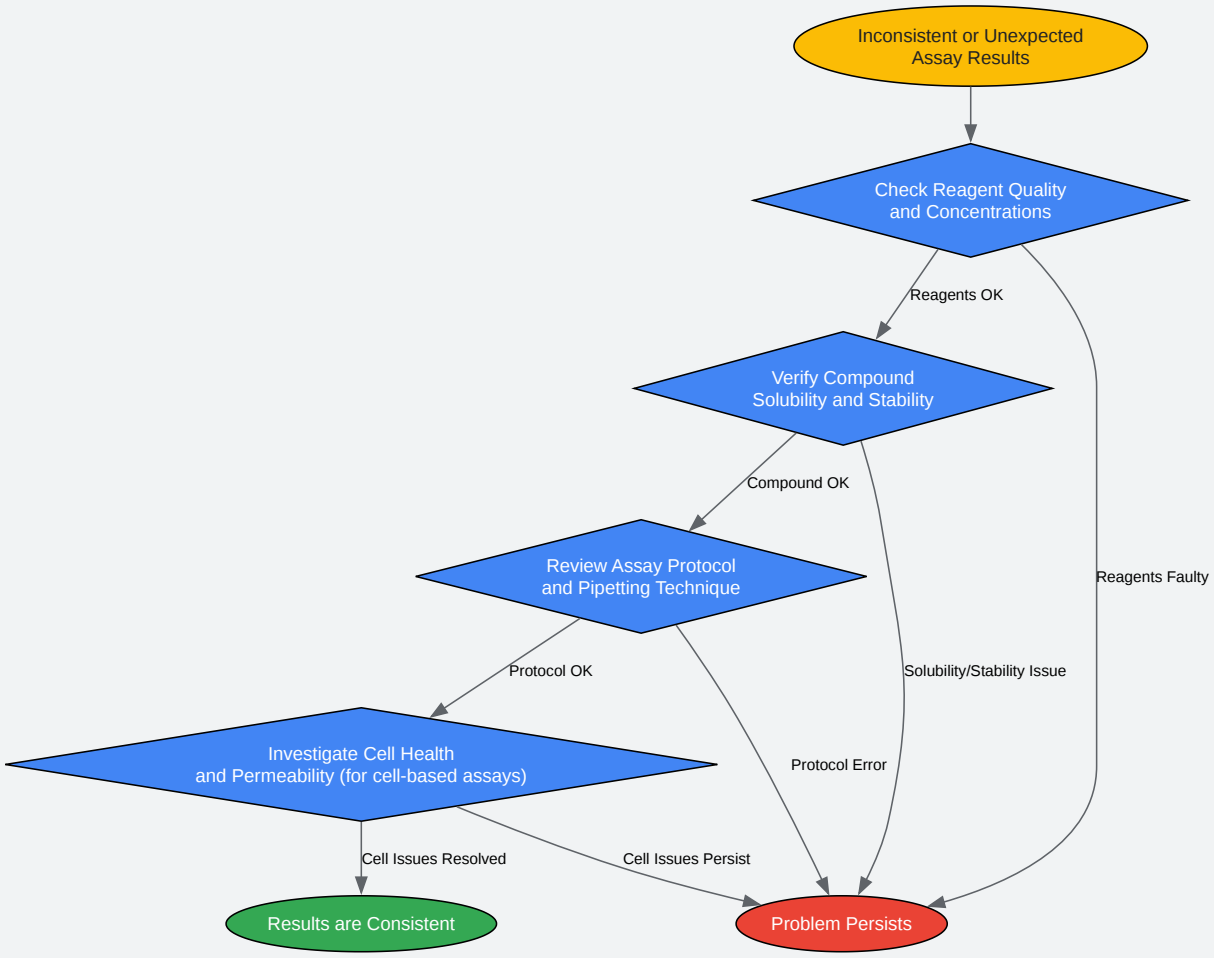

Click to download full resolution via product page

© 2026 BenchChem. All rights reserved.

Need Custom Synthesis?

BenchChem offers custom synthesis for rare earth carbides and specific isotopiclabeling.

Email: info@benchchem.com or Request Quote Online.

References

- 1. benchchem.com [benchchem.com]
- 2. benchchem.com [benchchem.com]
- 3. Discovery of Novel Aldose Reductase Inhibitors via the Integration of Ligand-Based and Structure-Based Virtual Screening with Experimental Validation - PMC [pmc.ncbi.nlm.nih.gov]
- 4. pubs.acs.org [pubs.acs.org]
- 5. researchgate.net [researchgate.net]
- 6. Stability and hydrolysis kinetics of spirosuccinimide type inhibitors of aldose reductase in aqueous solution and retardation of their hydrolysis by the target enzyme - PubMed [pubmed.ncbi.nlm.nih.gov]
- 7. researchgate.net [researchgate.net]
- 8. abcam.cn [abcam.cn]
- To cite this document: BenchChem. [Technical Support Center: Optimizing Aldose Reductase-IN-3 Concentration in Assays]. BenchChem, [2026]. [Online PDF]. Available at: [https://www.benchchem.com/product/b15574130/docs#technical-support-center-optimizing-aldose-reductase-in-3-concentration-in-assays]

Disclaimer & Data Validity:

The information provided in this document is for Research Use Only (RUO) and is strictly not intended for diagnostic or therapeutic procedures. While BenchChem strives to provide accurate protocols, we make no warranties, express or implied, regarding the fitness of this product for every specific experimental setup.

Technical Support: The protocols provided are for reference purposes. Unsure if this reagent suits your experiment?

Need Industrial/Bulk Grade? Request Custom Synthesis Quote

BenchChem

Our mission is to be the trusted global source of essential and advanced chemicals, empowering scientists and researchers to drive progress in science and industry.

Contact

Address: 3281 E Guasti Rd

Ontario, CA 91761, United States

Phone: (601) 213-4426

Email: info@benchchem.com

Contact our Ph.D. Support Team for a compatibility check

© 2026 BenchChem. All rights reserved.