A Comparative Guide to Validating the Therapeutic Potential of a Novel Astepyrone

Author: BenchChem Technical Support Team. **Date**: April 2026

Compound of Interest

Compound Name: *Astepyrone*

Cat. No.: *B15573720*

Get Quote

For Researchers, Scientists, and Drug Development Professionals

Introduction

The treatment of anxiety and depressive disorders remains a significant challenge, with existing therapies often limited by delayed onset of action, undesirable side effects, or potential for dependence.[1][2] Azapirones, such as buspirone, represent a distinct class of anxiolytics that act primarily as partial agonists at the serotonin 5-HT1A receptor, offering a non-sedating and non-addictive alternative to benzodiazepines.[2][3] This guide provides a framework for validating the therapeutic potential of "**Astepyrone**," a hypothetical novel **astepyrone** compound. It outlines the key experimental data required and compares its target profile against established first-line treatments, including Selective Serotonin Reuptake Inhibitors (SSRIs) and Serotonin-Norepinephrine Reuptake Inhibitors (SNRIs).[4][5]

Comparative Mechanism of Action

Astepyrone is hypothesized to function as a high-affinity partial agonist for the presynaptic and postsynaptic 5-HT1A receptors. This mechanism is distinct from that of SSRIs and SNRIs, which primarily act by blocking the reuptake of serotonin and/or norepinephrine.[6][7]

© 2026 BenchChem. All rights reserved.

- **Astepyrone** (Hypothesized): As a 5-HT1A partial agonist, **Astepyrone** is expected to modulate serotonergic activity. Presynaptically, it would reduce the firing rate of serotonergic neurons in the dorsal raphe nucleus. Postsynaptically, particularly in regions like the hippocampus and cortex, it would mimic serotonin but with a lower intrinsic activity, helping to stabilize the serotonergic system.

- SSRIs (e.g., Sertraline, Escitalopram): These agents selectively block the serotonin transporter (SERT), preventing the reabsorption of serotonin from the synaptic cleft.[6] This leads to an increased concentration of serotonin available to bind to postsynaptic receptors.

- SNRIs (e.g., Venlafaxine, Duloxetine): SNRIs inhibit the reuptake of both serotonin and norepinephrine, thereby increasing the synaptic concentrations of both neurotransmitters.[7]

Signaling Pathway for **Astepyrone** (Hypothesized)

© 2026 BenchChem. All rights reserved.

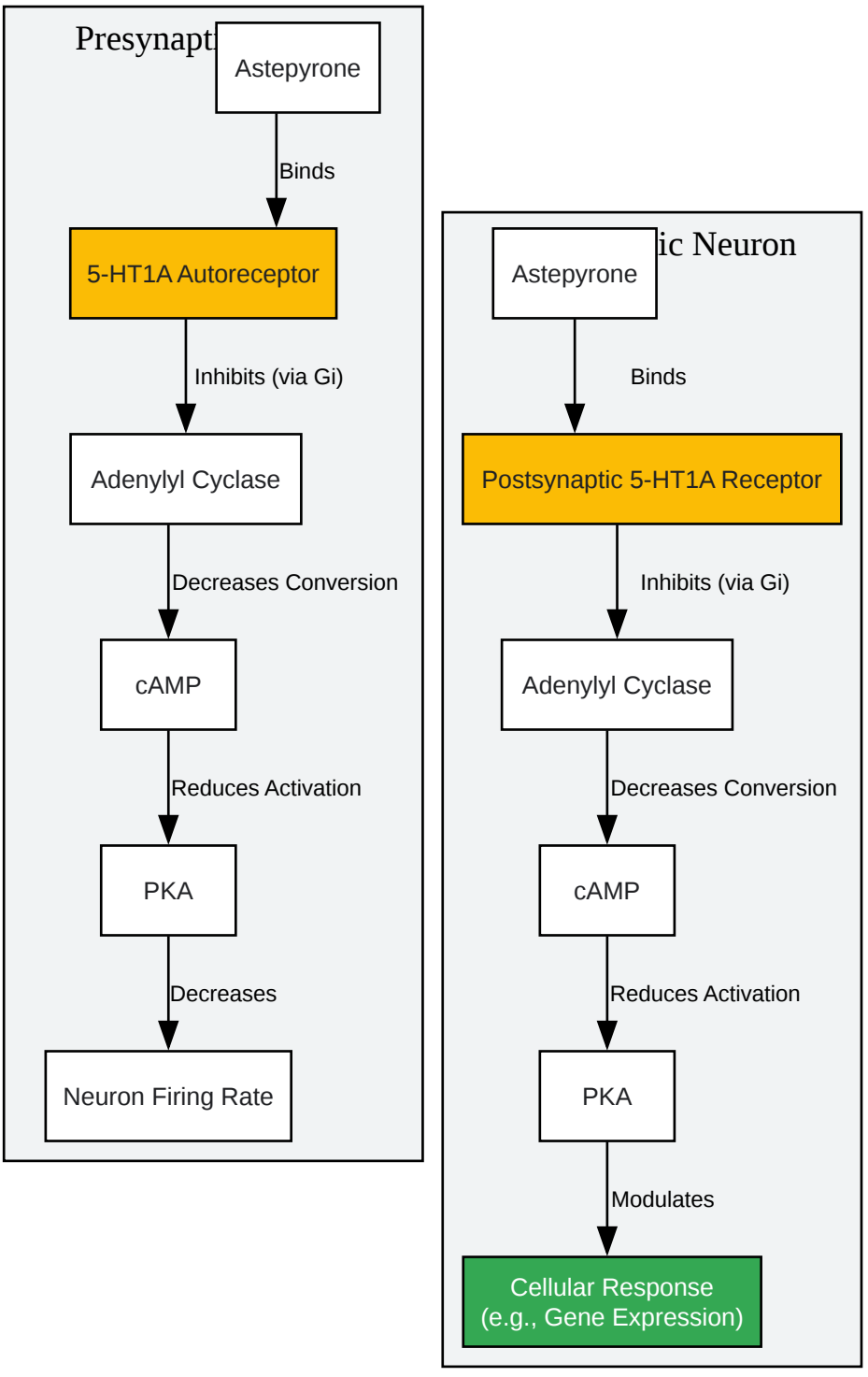

Click to download full resolution via product page

Caption: Hypothesized signaling pathway of **Astepyrone** at 5-HT1A receptors.

© 2026 BenchChem. All rights reserved.

Data Presentation: Comparative Drug Profiles

The following table summarizes the key characteristics of **Astepyrone**'s target profile compared to established antidepressant and anxiolytic agents.

Feature	Astepyrone (Target Profile)	Buspirone	Sertraline (SSRI)	Venlafaxine (SNRI)
Primary Mechanism	5-HT1A Partial Agonist	5-HT1A Partial Agonist[2][8]	Selective Serotonin Reuptake Inhibitor[6]	Serotonin & Norepinephrine Reuptake Inhibitor
Approved Indications	Generalized Anxiety Disorder (GAD), Major Depressive Disorder (MDD) (Target)	GAD[8]	MDD, GAD, OCD, PTSD[6][9]	MDD, GAD, Panic Disorder[4][9]
Onset of Action	2-4 weeks (Target)	2-4 weeks[10]	2-8 weeks[9]	2-4 weeks
Common Side Effects	Dizziness, nausea, headache (Expected)	Dizziness, nausea, headache[4]	Nausea, insomnia, sexual dysfunction, dry mouth[5][6]	Nausea, dizziness, sweating, increased blood pressure[4][5]
Abuse Potential	Low (Expected)	Low[2]	Low	Low
Withdrawal Syndrome	Minimal (Expected)	Minimal[2]	Moderate to Severe	Moderate to Severe

Preclinical Efficacy Data (Hypothetical)

To validate its anxiolytic and antidepressant potential, **Astepyrone** would be tested in established rodent behavioral models. The tables below present hypothetical data structures for these experiments.

© 2026 BenchChem. All rights reserved.

Table 1: Anxiolytic Activity in the Elevated Plus Maze (EPM)

Treatment Group (Dose)	Time Spent in Open Arms (seconds, Mean ± SEM)	Number of Open Arm Entries (Mean ± SEM)
Vehicle (Control)	35 ± 5	8 ± 2
Astepyrone (1 mg/kg)	75 ± 8	15 ± 3
Astepyrone (5 mg/kg)	110 ± 10	22 ± 4
Buspirone (5 mg/kg)	105 ± 9	20 ± 3
*p < 0.05, **p < 0.01 vs. Vehicle		

Table 2: Antidepressant-like Activity in the Forced Swim Test (FST)

Treatment Group (Dose)	Duration of Immobility (seconds, Mean ± SEM)
Vehicle (Control)	150 ± 12
Astepyrone (5 mg/kg)	105 ± 10
Astepyrone (10 mg/kg)	70 ± 8
Sertraline (10 mg/kg)	75 ± 9
p < 0.05, **p < 0.01 vs. Vehicle	

Experimental Protocols

Detailed methodologies are crucial for the replication and validation of findings.

5-HT1A Receptor Binding Assay

This assay determines the affinity of **Astepyrone** for the 5-HT1A receptor.

© 2026 BenchChem. All rights reserved.

- Objective: To determine the inhibitory constant (Ki) of **Astepyrone** by measuring its ability to displace a known radioligand from the 5-HT1A receptor.
- Materials:
  - Receptor Source: Membranes prepared from rat hippocampal tissue or a cell line expressing human 5-HT1A receptors.[11]
  - Radioligand: [^{3}H]8-OH-DPAT (a high-affinity 5-HT1A agonist).
  - Assay Buffer: 50 mM Tris-HCl, pH 7.4.[11]
  - Non-specific Binding Control: 10 µM unlabeled Serotonin or 8-OH-DPAT.[11]
  - Instrumentation: Scintillation counter, filtration apparatus with glass fiber filters.[11]
- Procedure:
  - Membrane Preparation: Homogenize tissue in ice-cold buffer, followed by centrifugation to pellet the membranes. Resuspend the pellet and determine protein concentration.[11]
  - Assay Setup: Prepare tubes containing the membrane preparation, a fixed concentration of [^{3}H]8-OH-DPAT (near its Kd value), and varying concentrations of **Astepyrone**.[12]
  - Incubation: Incubate tubes at a specified temperature (e.g., 25°C) for a sufficient time (e.g., 60 minutes) to reach binding equilibrium.[11]
  - Separation: Terminate the reaction by rapid filtration through glass fiber filters, washing with ice-cold buffer to remove unbound radioligand.[11]
  - Quantification: Measure the radioactivity trapped on the filters using a scintillation counter.
  - Data Analysis: Plot the percentage of specific binding against the log concentration of **Astepyrone** to determine the IC50 value (the concentration that inhibits 50% of specific binding). Convert the IC50 to a Ki value using the Cheng-Prusoff equation.

© 2026 BenchChem. All rights reserved.

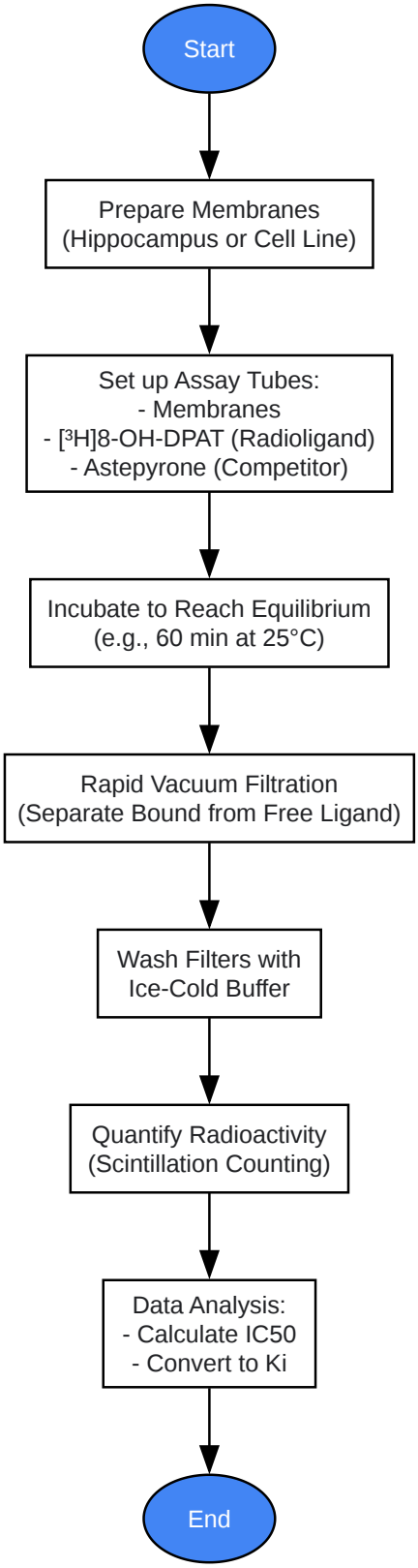

Click to download full resolution via product page

Caption: Workflow for a 5-HT1A receptor competitive binding assay.

© 2026 BenchChem. All rights reserved.

Elevated Plus Maze (EPM) for Anxiolytic Activity

The EPM test is a widely used behavioral assay to assess anxiety-like behaviors in rodents.[13][14]

- Apparatus: A plus-shaped maze raised above the floor, with two open arms and two perpendicular closed arms.[15]
- Procedure:
  - Habituation: Allow animals to acclimate to the testing room for at least 30-45 minutes before the trial.[13][16]
  - Drug Administration: Administer **Astepyrone**, vehicle, or a positive control (e.g., buspirone) intraperitoneally at a set time (e.g., 30 minutes) before the test.
  - Trial Initiation: Place the mouse at the center of the maze, facing a closed arm.[13][15]
  - Exploration: Allow the animal to freely explore the maze for a fixed period (typically 5 minutes).[13][17] The session is recorded by an overhead camera.
  - Data Collection: An automated tracking software measures parameters.
- Key Parameters Measured:
  - Time spent in the open arms vs. closed arms.
  - Number of entries into the open and closed arms.
  - An increase in the time spent and entries into the open arms is indicative of an anxiolytic effect.[14][15]

© 2026 BenchChem. All rights reserved.

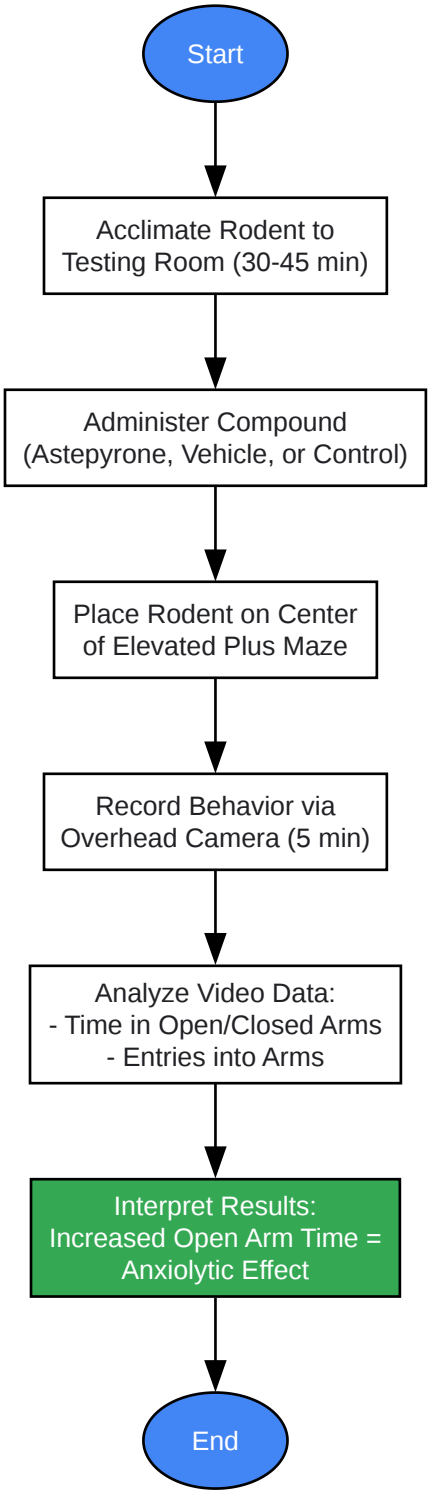

Click to download full resolution via product page

Caption: Experimental workflow for the Elevated Plus Maze test.

Forced Swim Test (FST) for Antidepressant-like Activity

© 2026 BenchChem. All rights reserved.

The FST is a common behavioral test used to screen for antidepressant efficacy.[18][19] It is based on the principle that an animal will cease escape-oriented behaviors when placed in a stressful, inescapable situation.[20]

- Apparatus: A transparent cylindrical container filled with water (23-25°C) to a depth where the mouse cannot touch the bottom.[18][20]
- Procedure:
  - Habituation: Transport animals to the testing room at least 30-60 minutes prior to the test.[19][20]
  - Drug Administration: Administer **Astepyrone**, vehicle, or a positive control (e.g., an SSRI) according to the drug's pharmacokinetic profile.
  - Trial: Gently place the mouse into the water-filled cylinder for a 6-minute session.[18][19]
  - Recording: The session is recorded for later analysis.
  - Post-Trial Care: After 6 minutes, remove the mouse, dry it gently, and place it in a heated cage to prevent hypothermia before returning it to its home cage.[21]
- Data Analysis: The primary measure is the duration of immobility during the final 4 minutes of the 6-minute test.[20] Immobility is defined as the state in which the animal makes only the minimal movements necessary to keep its head above water. A significant decrease in immobility time suggests an antidepressant-like effect.[21]

© 2026 BenchChem. All rights reserved.

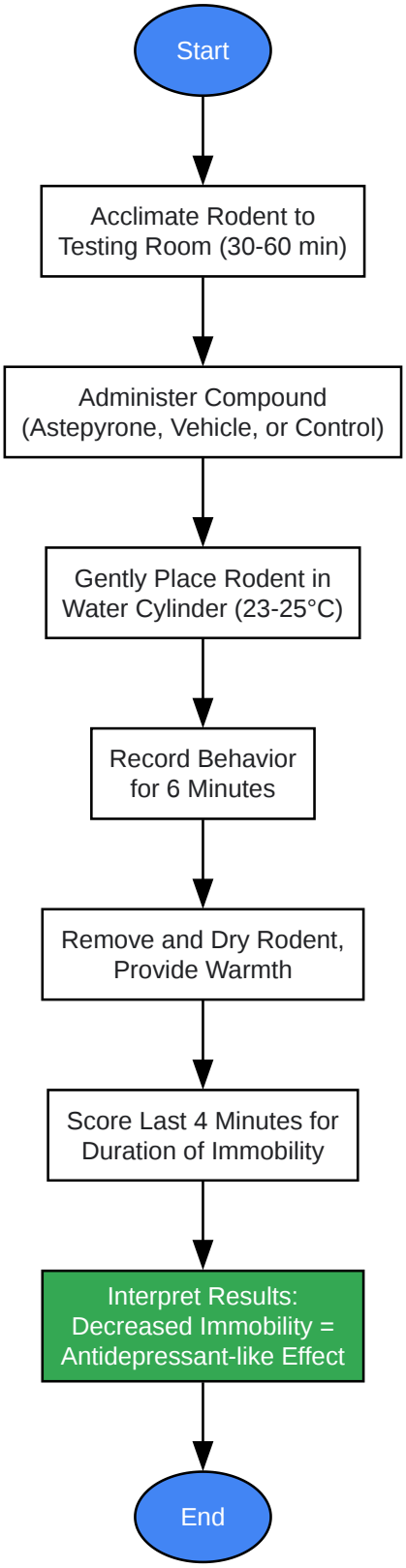

Click to download full resolution via product page

Caption: Experimental workflow for the Forced Swim Test.

© 2026 BenchChem. All rights reserved.

Conclusion

Validating the therapeutic potential of a novel compound like **Astepyrone** requires a systematic approach, beginning with its specific molecular interactions and progressing through robust preclinical behavioral models. As a hypothesized 5-HT1A partial agonist, **Astepyrone** has the potential to offer a favorable efficacy and safety profile for anxiety and depression, comparable to or exceeding that of existing azapirones and distinct from SSRIs/SNRIs. The experimental framework provided in this guide offers a clear pathway for generating the necessary comparative data to establish its therapeutic value for researchers and drug development professionals. Successful outcomes in these assays would provide a strong rationale for advancing **Astepyrone** into clinical development.

Need Custom Synthesis?

BenchChem offers custom synthesis for rare earth carbides and specific isotopiclabeling.

Email: info@benchchem.com or Request Quote Online.

References

- 1. Anxiolytic Terpenoids and Aromatherapy for Anxiety and Depression - PubMed [pubmed.ncbi.nlm.nih.gov]
- 2. Azapirones: an alternative to benzodiazepines for anxiety - PubMed [pubmed.ncbi.nlm.nih.gov]
- 3. BuSpar Alternatives: What Drugs Are Similar to Buspirone? [addictionresource.com]
- 4. Top Buspirone alternatives and how to switch your Rx [singlecare.com]
- 5. SSRIs vs. SNRIs: Differences, similarities, and which is better for you [singlecare.com]
- 6. Selective serotonin reuptake inhibitors (SSRIs) - Mayo Clinic [mayoclinic.org]
- 7. drugs.com [drugs.com]
- 8. Buspirone - StatPearls - NCBI Bookshelf [ncbi.nlm.nih.gov]
- 9. Antidepressants - NHS [nhs.uk]
- 10. Buspirone vs Bupropion: Which is Better? - K Health [khealth.com]
- 11. benchchem.com [benchchem.com]

© 2026 BenchChem. All rights reserved.

- 12. Discovery of Natural Product-derived 5-HT1A Receptor Binders by Cheminfomatics Modeling of Known Binders, High Throughput Screening and Experimental Validation - PMC [pmc.ncbi.nlm.nih.gov]
- 13. Elevated plus maze protocol [protocols.io]
- 14. medchemexpress.com [medchemexpress.com]
- 15. Elevated Plus Maze for Mice - PMC [pmc.ncbi.nlm.nih.gov]
- 16. behaviorcloud.com [behaviorcloud.com]
- 17. MultiCenter Mouse Behavior Trial: Elevated Plus Maze Protocol [albany.edu]
- 18. The Mouse Forced Swim Test - PMC [pmc.ncbi.nlm.nih.gov]
- 19. Video: The Mouse Forced Swim Test [jove.com]
- 20. Video: The Forced Swim Test as a Model of Depressive-like Behavior [jove.com]
- 21. Factsheet on the forced swim test :: Understanding Animal Research [understandinganimalresearch.org.uk]

- To cite this document: BenchChem. [A Comparative Guide to Validating the Therapeutic Potential of a Novel Astepyrone]. BenchChem, [2026]. [Online PDF]. Available at: [https://www.benchchem.com/product/b15573720/docs#a-comparative-guide-to-validating-the-therapeutic-potential-of-a-novel-astepyrone]

Disclaimer & Data Validity:

The information provided in this document is for Research Use Only (RUO) and is strictly not intended for diagnostic or therapeutic procedures. While BenchChem strives to provide accurate protocols, we make no warranties, express or implied, regarding the fitness of this product for every specific experimental setup.

Technical Support: The protocols provided are for reference purposes. Unsure if this reagent suits your experiment?

Need Industrial/Bulk Grade? Request Custom Synthesis Quote

© 2026 BenchChem. All rights reserved.

BenchChem

Our mission is to be the trusted global source of essential and advanced chemicals, empowering scientists and researchers to drive progress in science and industry.

Contact

Address: 3281 E Guasti Rd

Ontario, CA 91761, United States

Phone: (601) 213-4426

Email: info@benchchem.com

Contact our Ph.D. Support Team for a compatibility check

© 2026 BenchChem. All rights reserved.