# The Multifaceted Roles of Autotaxin (ENPP2): A Technical Guide for Researchers

**Author**: BenchChem Technical Support Team. **Date**: April 2026

***Compound of Interest***

*Compound Name:* *ONO-8430506*

*Cat. No.:* *B15572983*

*Get Quote*

## Abstract

Autotaxin (ATX), also known as ectonucleotide pyrophosphatase/phosphodiesterase 2 (ENPP2), is a secreted glycoprotein with essential lysophospholipase D (lysoPLD) activity. It plays a pivotal role in extracellular signaling by catalyzing the hydrolysis of lysophosphatidylcholine (LPC) to generate the bioactive lipid mediator, lysophosphatidic acid (LPA). The ATX-LPA signaling axis is integral to a wide array of physiological processes, including embryonic development, wound healing, and immune regulation. Dysregulation of this axis has been implicated in the pathogenesis of numerous diseases, most notably cancer, fibrosis, and chronic inflammation. This technical guide provides an in-depth overview of the core biological functions of autotaxin, focusing on its enzymatic activity, signaling pathways, and involvement in disease. It is intended for researchers, scientists, and drug development professionals seeking a comprehensive understanding of ATX as a therapeutic target. The guide includes a compilation of quantitative data, detailed experimental protocols for key assays, and visualizations of signaling pathways and experimental workflows to facilitate further research in this field.

## Introduction to Autotaxin (ENPP2)

© 2026 BenchChem. All rights reserved. 

Autotaxin is a member of the ectonucleotide pyrophosphatase/phosphodiesterase (ENPP) family of enzymes.[1] Initially identified as a tumor cell motility-stimulating factor, its primary biological function is now understood to be the production of LPA in the extracellular environment.[1] ATX is widely expressed in various tissues and is found in most biological fluids, including blood, cerebrospinal fluid, and saliva.[2] The protein structure of ATX consists of a signal peptide, two N-terminal somatomedin B-like (SMB) domains, a central phosphodiesterase (PDE) catalytic domain, and a C-terminal nuclease-like domain.[2] The catalytic activity resides within the PDE domain, which is also responsible for binding its primary substrate, LPC.

The product of ATX's enzymatic activity, LPA, is a potent signaling molecule that exerts its effects by binding to a family of at least six G protein-coupled receptors (GPCRs), designated LPA1 through LPA6.[3] The activation of these receptors initiates a cascade of downstream signaling events that regulate a diverse range of cellular responses, including proliferation, survival, migration, and differentiation.

## Enzymatic Function and Kinetics

The principal enzymatic function of autotaxin is its lysophospholipase D activity, which hydrolyzes the choline headgroup from LPC to produce LPA. This reaction is the primary source of extracellular LPA. The kinetic parameters of this enzymatic reaction have been characterized, providing insights into its efficiency and substrate specificity.

### Table 1: Enzyme Kinetic Parameters of Autotaxin (ENPP2)

© 2026 BenchChem. All rights reserved.

| Parameter | Substrate | Value | Species | Conditions | Reference |
|---|---|---|---|---|---|
| Km | 16:0-LPC | 0.5 mM | Human | pH 8.5 | |
| Km | pNP-TMP | 5.5 mM | Human | pH 8.5 | |
| Ki | FTY720-P | 0.2 µM | - | Bis-pNPP as substrate | |
| Ki | Compound 17 | 0.7 µM | - | FS-3 as substrate | |
| Ki | Compound 22 | 24 ± 4 nM | - | - | |
| Ki | Compound 23 | 9 ± 1 nM | - | - | |

## The ATX-LPA Signaling Axis

The biological effects of autotaxin are predominantly mediated by the interaction of its product, LPA, with its cognate receptors. The LPA receptors couple to various heterotrimeric G proteins, leading to the activation of distinct downstream signaling pathways. The specificity of the cellular response to LPA is determined by the expression pattern of LPA receptors on the cell surface and the specific G proteins to which they couple.

## LPA Receptors and G-Protein Coupling

The six identified LPA receptors exhibit differential coupling to the four main families of Gα proteins (Gαs, Gαi/o, Gαq/11, and Gα12/13), which dictates the subsequent intracellular signaling cascades.

## Table 2: LPA Receptor G-Protein Coupling Specificity

© 2026 BenchChem. All rights reserved.

| LPA Receptor | Coupled Gα Proteins | Primary Downstream Effectors | Reference |
|---|---|---|---|
| LPA1 | Gαi/o, Gαq/11, Gα12/13 | PLC, PI3K/Akt, Rho, MAPK | |
| LPA2 | Gαi/o, Gαq/11, Gα12/13 | PLC, PI3K/Akt, Rho, Ras, MAPK | |
| LPA3 | Gαi/o, Gαq/11 | PLC, MAPK | |
| LPA4 | Gαs, Gαi/o, Gαq/11, Gα12/13 | Adenylyl Cyclase, Rho, PLC | |
| LPA5 | Gαq/11, Gα12/13 | PLC, Rho | |
| LPA6 | Gα12/13 | Rho | |

## Visualizing the ATX-LPA Signaling Pathway

The intricate network of interactions within the ATX-LPA signaling axis can be visualized using a signaling pathway diagram.

© 2026 BenchChem. All rights reserved.

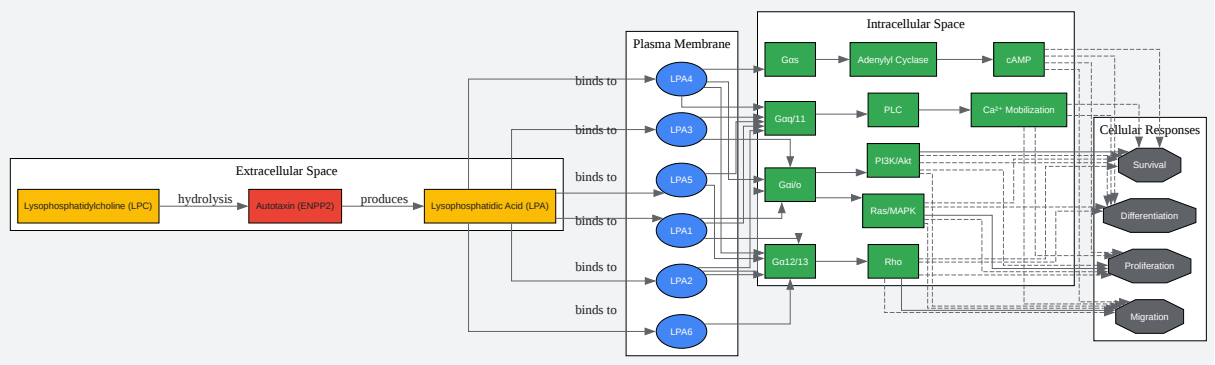


Click to download full resolution via product page

Caption: The ATX-LPA signaling pathway.

# Role of Autotaxin in Disease

The dysregulation of the ATX-LPA signaling axis is a key contributor to the pathophysiology of several diseases. Elevated levels of ATX and/or LPA have been observed in cancer, fibrosis, and inflammatory conditions, making this pathway an attractive target for therapeutic intervention.

## Cancer

In numerous cancers, including breast, ovarian, and liver cancer, increased expression of autotaxin is associated with tumor progression, metastasis, and chemoresistance. ATX

© 2026 BenchChem. All rights reserved.

secreted by tumor cells or stromal cells in the tumor microenvironment generates LPA, which in turn stimulates cancer cell proliferation, survival, and invasion.

## Table 3: Autotaxin Expression in Cancer

| Cancer Type | Observation | Fold Change/Level | Reference |
|---|---|---|---|
| Breast Cancer | Serum ATX levels significantly higher in patients vs. healthy controls. | 291.32 ± 38.02 ng/ml vs 254.04 ± 21.03 ng/ml | |
| Ovarian Cancer | ATX levels are two-fold higher in ovarian cancer tissue than in normal tissue. | >2-fold | |
| Hepatocellular Carcinoma | Serum ATX and plasma LPA levels are significantly higher in HCC patients. | - | |
| Non-small cell lung cancer | ATX expression is increased. | - | |

## Fibrosis

The ATX-LPA axis plays a crucial role in the pathogenesis of fibrotic diseases, such as idiopathic pulmonary fibrosis (IPF) and liver fibrosis. In fibrotic tissues, elevated ATX levels lead to increased LPA production, which promotes fibroblast proliferation, differentiation into myofibroblasts, and excessive deposition of extracellular matrix.

## Table 4: Autotaxin Levels in Fibrotic Diseases

© 2026 BenchChem. All rights reserved.

| Disease | Sample Type | Observation | Level | Reference |
|---|---|---|---|---|
| Fibrosing Interstitial Lung Disease | Serum | Significantly higher ATX levels in patients vs. healthy controls. | >0.721 mg·L-1 associated with worse outcome in males. | |
| Non-alcoholic fatty liver disease | Serum | Significantly higher ATX levels in NAFLD patients. | 0.86 mg/L vs 0.76 mg/L in controls. | |
| Chronic Hepatitis C | Serum | ATX concentration increases with liver fibrosis stage. | Cutoff for ≥F2: 1.1 mg/L (male), 1.7 mg/L (female). | |
| Acute Respiratory Distress Syndrome | Serum | Markedly higher in non-survivors. | 44.79 ± 13.38 ng/mL vs. 35.09 ± 13.89 ng/mL in survivors. | |

## Inflammation

Autotaxin and LPA are also implicated in chronic inflammatory diseases. They can modulate the function of various immune cells and promote the production of pro-inflammatory cytokines and chemokines, thereby contributing to the inflammatory process.

# Autotaxin Inhibitors

The critical role of the ATX-LPA axis in various pathologies has spurred the development of small molecule inhibitors targeting autotaxin's enzymatic activity. These inhibitors are being investigated as potential therapeutics for cancer, fibrosis, and inflammatory diseases.

## Table 5: Potency of Selected Autotaxin Inhibitors

© 2026 BenchChem. All rights reserved.

| Inhibitor | Type | IC50 | Substrate | Reference |
|---|---|---|---|---|
| S32826 | Lipid-like | 5.6 nM | LPC | |
| BrP-LPA | Lipid-like | 0.7–1.6 µM | LPC | |
| Compound 6 | Lipid-like | 220 nM | LPC | |
| NSC48300 (Compound 12) | Small Molecule | Ki = 240 nM | - | |
| HA155 (Compound 20) | Small Molecule | 5.7 nM | LPC | |
| Compound 43 | Small Molecule | 43.6 nM | LPC | |
| PAT-078 | Small Molecule | 472 nM | LPC | |
| PAT-494 | Small Molecule | 20 nM | LPC | |
| PAT-347 | Small Molecule | 0.3 nM | LPC | |
| ATX-1d | Small Molecule | 1.8 ± 0.3 µM | - | - |

# Key Experimental Protocols

The study of autotaxin's biological functions relies on a variety of specialized experimental assays. This section provides detailed methodologies for some of the key experiments.

## Autotaxin Activity Assay (TOOS Method)

This colorimetric assay measures the choline released from the hydrolysis of LPC by autotaxin.

Materials:

- 10x LysoPLD buffer (1 M Tris-HCl pH 9.0, 5 M NaCl, 50 mM $MgCl_2$, 50 mM $CaCl_2$, 600 µM $CoCl_2$)
- Lysophosphatidylcholine (LPC)
- Plasma or other biological samples

© 2026 BenchChem. All rights reserved.

- Color mix (0.5 mM 4-AAP, 7.95 U/ml HRP, 0.3 mM TOOS, 2 U/ml choline oxidase in 5 mM MgCl2/ 50 mM Tris-HCl pH 8.0)
- 96-well plate
- Plate reader capable of measuring absorbance at 555 nm

Procedure:

- Prepare 1x LysoPLD buffer containing 1 mM LPC and pre-incubate at 37°C for 30 minutes.
- Dilute plasma samples 100-fold.
- In a 96-well plate, incubate the diluted plasma samples with the 1x LysoPLD buffer at a final volume of 100 µl. Incubate at 37°C for 4 hours.
- Prepare the color mix and add 100 µl to each well.
- Measure the absorbance at 555 nm every 5 minutes for 20 minutes.
- Calculate ATX activity based on the rate of change in absorbance.

## Cell Migration Assay (Transwell/Boyden Chamber)

This assay assesses the chemotactic response of cells towards a gradient of a chemoattractant, such as LPA produced by autotaxin.

Materials:

- Transwell inserts (e.g., 8 µm pore size)
- 24-well companion plates
- Cell culture medium (serum-free for starvation)
- Chemoattractant (e.g., LPA or conditioned medium containing ATX)
- Cells of interest

© 2026 BenchChem. All rights reserved.

- Cotton swabs
- Fixation solution (e.g., methanol)
- Staining solution (e.g., Crystal Violet or Diff-Quick)
- Microscope

Procedure:

- Culture cells to 80-90% confluency.
- Starve cells in serum-free medium for 18-24 hours.
- Trypsinize and resuspend cells in serum-free medium at a desired concentration (e.g., 1 x 105 cells/100 µL).
- Add the chemoattractant to the lower chamber of the 24-well plate.
- Seed the cell suspension into the upper chamber of the Transwell insert.
- Incubate the plate at 37°C and 5% CO2 for a duration appropriate for the cell type (e.g., 4-24 hours).
- After incubation, remove the non-migrated cells from the upper surface of the insert membrane using a cotton swab.
- Fix the migrated cells on the lower surface of the membrane with a suitable fixative.
- Stain the fixed cells.
- Count the number of migrated cells in several fields of view using a microscope.

## Experimental Workflow for Studying Autotaxin in a Disease Model

A typical workflow for investigating the role of autotaxin in a preclinical disease model involves several key steps, from model induction to data analysis.

© 2026 BenchChem. All rights reserved.

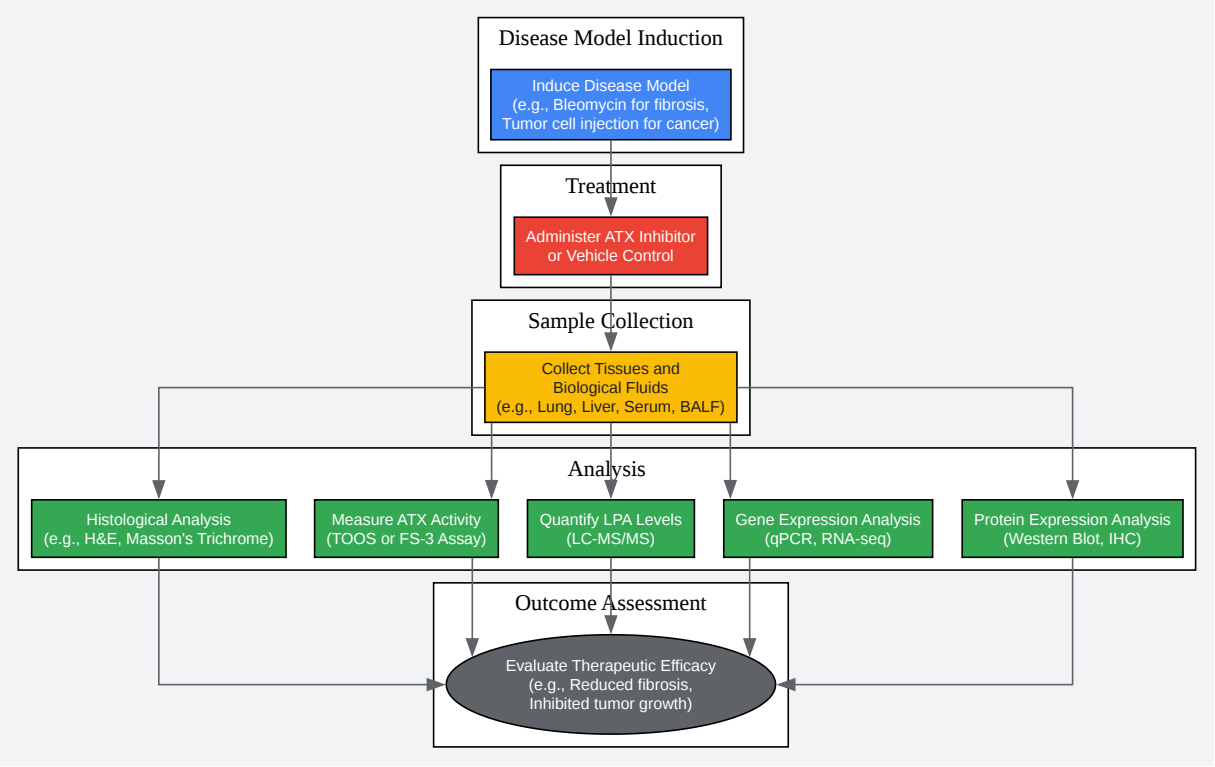


Click to download full resolution via product page

Caption: A typical experimental workflow.

# Conclusion

Autotaxin (ENPP2) is a critical enzyme that orchestrates a wide range of biological processes through its production of the signaling lipid LPA. The ATX-LPA axis is a key player in both normal physiology and the pathogenesis of numerous diseases, including cancer, fibrosis, and inflammation. The development of potent and specific inhibitors of autotaxin holds significant

© 2026 BenchChem. All rights reserved.

promise for the treatment of these conditions. This technical guide provides a comprehensive resource for researchers, summarizing the current understanding of autotaxin's biological functions, providing quantitative data for reference, and detailing key experimental methodologies to facilitate further investigation into this important therapeutic target. A deeper understanding of the intricacies of the ATX-LPA signaling network will undoubtedly pave the way for novel and effective therapeutic strategies.

***Need Custom Synthesis?***

*BenchChem offers custom synthesis for rare earth carbides and specific isotopiclabeling.*

*Email: info@benchchem.com or Request Quote Online.*

## References

- 1. The Structural Binding Mode of the Four Autotaxin Inhibitor Types that Differentially Affect Catalytic and Non-Catalytic Functions - PMC [pmc.ncbi.nlm.nih.gov]
- 2. caymanchem.com [caymanchem.com]
- 3. Lysophosphatidic Acid Receptors: Biochemical and Clinical Implications in Different Diseases [jcancer.org]
- To cite this document: BenchChem. [The Multifaceted Roles of Autotaxin (ENPP2): A Technical Guide for Researchers]. BenchChem, [2026]. [Online PDF]. Available at: [https://www.benchchem.com/product/b15572983/docs#the-multifaceted-roles-of-autotaxin-enpp2-a-technical-guide-for-researchers]

---

**Disclaimer & Data Validity:**

The information provided in this document is for Research Use Only (RUO) and is strictly not intended for diagnostic or therapeutic procedures. While BenchChem strives to provide accurate protocols, we make no warranties, express or implied, regarding the fitness of this product for every specific experimental setup.

**Technical Support:**The protocols provided are for reference purposes. Unsure if this reagent suits your experiment?

**Need Industrial/Bulk Grade?** Request Custom Synthesis Quote

# BenchChem

Our mission is to be the trusted global source of essential and advanced chemicals, empowering scientists and researchers to drive progress in science and industry.

Contact

Address: 3281 E Guasti Rd

Ontario, CA 91761, United States

Phone: (601) 213-4426

Email: info@benchchem.com

Contact our Ph.D. Support Team for a compatibility check

© 2026 BenchChem. All rights reserved.