Leupeptin in Protease Inhibitor Cocktails: Application Notes and Protocols for Researchers

Author: BenchChem Technical Support Team. **Date**: April 2026

Compound of Interest

Compound Name:	*Leupeptin*
CAS No.:	*103476-89-7; 24365-47-7; 55123-66-5*
Cat. No.:	*B15567203*

Get Quote

For Researchers, Scientists, and Drug Development Professionals

These application notes provide a comprehensive guide to the use of **leupeptin** as a critical component of protease inhibitor cocktails for preventing protein degradation during experimental procedures. Detailed protocols for cell lysis, protein extraction, and downstream applications are included, along with quantitative data and visualizations to aid in experimental design and execution.

Introduction to **Leupeptin** and Protease Inhibition

When cells are lysed, endogenous proteases are released from cellular compartments, which can rapidly degrade proteins of interest.[1] This proteolytic degradation can lead to lower protein yields and compromised experimental results.[1] Protease inhibitor cocktails are essential additives to lysis buffers to preserve the integrity of protein samples.[2][3]

© 2026 BenchChem. All rights reserved.

Leupeptin is a naturally occurring tripeptide that acts as a reversible, competitive inhibitor of a broad range of serine and cysteine proteases.[4][5] Its mechanism of action involves the formation of a covalent hemiacetal adduct between its aldehyde group and the hydroxyl or thiol group in the active site of the protease.[4][6] **Leupeptin** is effective against proteases such as trypsin, plasmin, cathepsins, and calpain.[7][8] It is a crucial component of many protease inhibitor cocktails due to its broad-spectrum activity.

Data Presentation: Efficacy of Protease Inhibition

The inclusion of a protease inhibitor cocktail containing **leupeptin** significantly enhances the stability of proteins in cell lysates. This can be observed both qualitatively by techniques like Western blotting and quantitatively through protein yield and protease activity assays.

Table 1: Commonly Used Protease Inhibitor Cocktail Recipe (100X Stock)

This table provides a typical recipe for a homemade 100X protease inhibitor cocktail. The final concentration in the lysis buffer should be 1X.

Inhibitor	Target Proteases	Stock Solution Concentration (100X)	Final (1X) Concentration
Aprotinin	Serine Proteases	2 mg/mL in H_2O	2 µg/mL
Leupeptin	Serine and Cysteine Proteases	10 mM in H_2O or DMSO	10 µM
Pepstatin A	Aspartic Proteases	1 mM in Methanol or DMSO	1 µM
PMSF or AEBSF	Serine Proteases	100 mM in Isopropanol or H_2O	1 mM
EDTA	Metalloproteases	500 mM in H_2O (pH 8.0)	5 mM

Note: PMSF is highly unstable in aqueous solutions and should be added to the lysis buffer immediately before use.

© 2026 BenchChem. All rights reserved.

Table 2: **Leupeptin** Inhibition Constants (Ki) and 50% Inhibitory Concentrations (IC50)

This table summarizes the inhibitory potency of **leupeptin** against various proteases, providing an indication of its effectiveness.

Protease	Organism/Source	Ki	IC50
Trypsin	Porcine	3.5 nM	2 µg/mL
Plasmin	Human	3.4 nM	8 µg/mL
Cathepsin B	Human	4.1 nM	0.44 µg/mL
Calpain	-	10 nM	-
Kallikrein	Porcine	-	75 µg/mL

Experimental Protocols

Preparation of **Leupeptin** Stock Solution (10 mM)

Materials:

- **Leupeptin** hemisulfate (MW: 475.6 g/mol)
- Sterile, deionized water or DMSO
- Microcentrifuge tubes

Procedure:

- Weigh out 10 mg of **leupeptin** hemisulfate.
- Dissolve the **leupeptin** in 2.1 mL of sterile water or DMSO to achieve a final concentration of 10 mM.[7]
- Mix thoroughly by vortexing until completely dissolved.
- Aliquot the stock solution into smaller volumes (e.g., 50 µL) to avoid repeated freeze-thaw cycles.

© 2026 BenchChem. All rights reserved.

- Store the aliquots at -20°C. The stock solution is stable for up to one month in water and up to six months in DMSO at -20°C.[9][10]

Protocol for Mammalian Cell Lysis using RIPA Buffer

Materials:

- Cultured mammalian cells
- Ice-cold Phosphate-Buffered Saline (PBS)
- Ice-cold RIPA Lysis Buffer (50 mM Tris-HCl pH 8.0, 150 mM NaCl, 1% NP-40, 0.5% sodium deoxycholate, 0.1% SDS)
- 100X Protease Inhibitor Cocktail (containing **leupeptin**)
- Cell scraper
- Microcentrifuge

Procedure:

- Place the cell culture dish on ice and aspirate the culture medium.
- Wash the cells twice with ice-cold PBS.
- Immediately before use, add the 100X protease inhibitor cocktail to the required volume of RIPA buffer to a final concentration of 1X (e.g., add 10 µL of 100X cocktail to 990 µL of RIPA buffer).
- Add the chilled RIPA buffer with inhibitors to the cells (e.g., 500 µL for a 10 cm dish).
- Scrape the cells from the dish and transfer the cell lysate to a pre-chilled microcentrifuge tube.
- Incubate the lysate on ice for 30 minutes, with occasional vortexing.
- Centrifuge the lysate at 14,000 x g for 15 minutes at 4°C to pellet the cell debris.

© 2026 BenchChem. All rights reserved.

- Carefully transfer the supernatant (protein lysate) to a new pre-chilled tube.
- Determine the protein concentration using a suitable protein assay (e.g., BCA or Bradford). Note that **leupeptin**'s aldehyde group may interfere with the Lowry and, to a lesser extent, the Bradford assays.
- The lysate is now ready for downstream applications or can be stored at -80°C.

Protocol for Immunoprecipitation (IP)

Materials:

- Cell lysate (prepared as described above)
- Primary antibody specific to the protein of interest
- Protein A/G magnetic beads or agarose slurry
- Wash Buffer (e.g., IP lysis buffer or a modified, less stringent buffer)
- Elution Buffer (e.g., 1X SDS-PAGE sample buffer)

Procedure:

- Pre-clear the lysate by incubating it with protein A/G beads for 1 hour at 4°C on a rotator. This step reduces non-specific binding.
- Centrifuge to pellet the beads and transfer the supernatant to a new tube.
- Add the primary antibody to the pre-cleared lysate and incubate for 2-4 hours or overnight at 4°C with gentle rotation.
- Add fresh protein A/G beads to the lysate-antibody mixture and incubate for another 1-2 hours at 4°C with rotation to capture the antibody-protein complex.
- Pellet the beads by centrifugation or using a magnetic rack.
- Discard the supernatant and wash the beads three to five times with ice-cold Wash Buffer. Ensure the protease inhibitor cocktail is included in the wash buffer to maintain protection.

© 2026 BenchChem. All rights reserved.

- After the final wash, remove all supernatant and resuspend the beads in 1X SDS-PAGE sample buffer.
- Boil the samples at 95-100°C for 5-10 minutes to elute the protein and denature it for SDS-PAGE.
- Centrifuge to pellet the beads, and the supernatant containing the immunoprecipitated protein is ready for Western blot analysis.

Protocol for Western Blotting

Materials:

- Protein lysate (prepared as described above)
- SDS-PAGE gels
- Transfer buffer
- PVDF or nitrocellulose membrane
- Blocking buffer (e.g., 5% non-fat milk or BSA in TBST)
- Primary and secondary antibodies
- TBST (Tris-Buffered Saline with 0.1% Tween-20)
- Chemiluminescent substrate

Procedure:

- Mix the protein lysate with Laemmli sample buffer and boil at 95-100°C for 5 minutes.
- Load equal amounts of protein per lane onto an SDS-PAGE gel and run the gel to separate the proteins by size.
- Transfer the separated proteins from the gel to a PVDF or nitrocellulose membrane.

© 2026 BenchChem. All rights reserved.

- Block the membrane with blocking buffer for 1 hour at room temperature to prevent non-specific antibody binding.
- Incubate the membrane with the primary antibody (diluted in blocking buffer) overnight at 4°C with gentle agitation.
- Wash the membrane three times for 10 minutes each with TBST.
- Incubate the membrane with the HRP-conjugated secondary antibody (diluted in blocking buffer) for 1 hour at room temperature.
- Wash the membrane again three times for 10 minutes each with TBST.
- Incubate the membrane with a chemiluminescent substrate and visualize the protein bands using an imaging system.

Visualizations

Experimental Workflow for Protein Extraction and Analysis

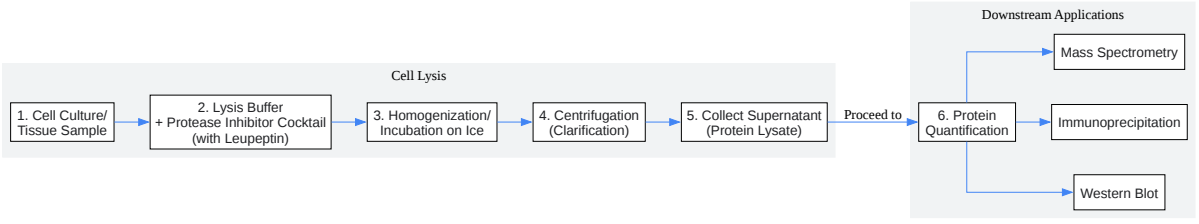

Click to download full resolution via product page

Caption: A typical workflow for protein extraction using a protease inhibitor cocktail and subsequent downstream applications.

EGFR Signaling Pathway

The Epidermal Growth Factor Receptor (EGFR) signaling pathway is a crucial regulator of cell proliferation and survival, and its dysregulation is implicated in many cancers.[8] Studying the phosphorylation status of EGFR and its downstream targets requires efficient inhibition of both proteases and phosphatases during cell lysis to preserve these transient post-translational modifications.

© 2026 BenchChem. All rights reserved.

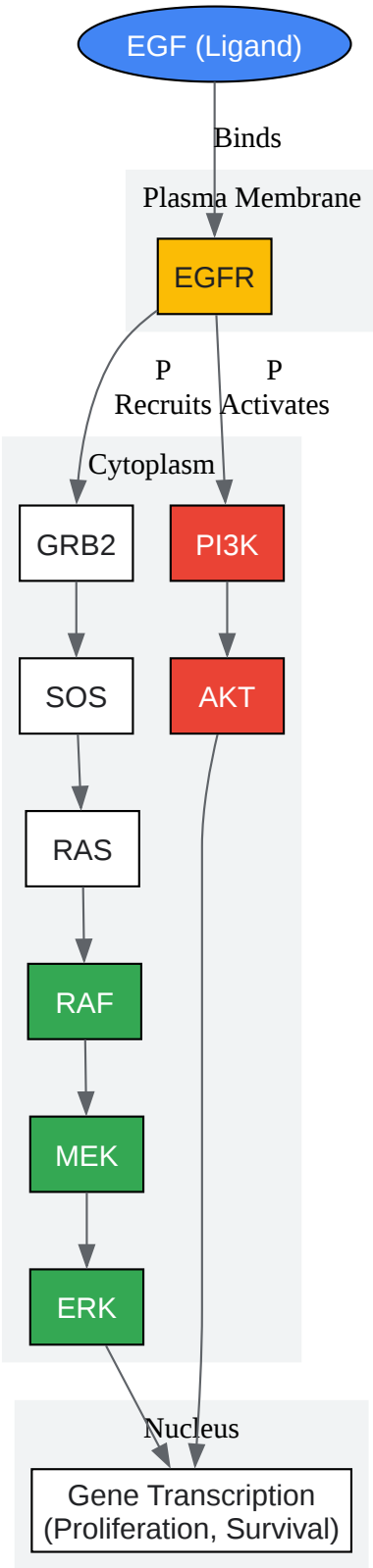

Click to download full resolution via product page

© 2026 BenchChem. All rights reserved.

Caption: Simplified diagram of the EGFR signaling pathway, highlighting key components often analyzed by Western blot.

By following these detailed protocols and understanding the critical role of **leupeptin** within a comprehensive protease inhibitor cocktail, researchers can significantly improve the quality and reliability of their experimental data.

Need Custom Synthesis?

BenchChem offers custom synthesis for rare earth carbides and specific isotopiclabeling.

Email: info@benchchem.com or Request Quote Online.

References

- 1. bio-rad-antibodies.com [bio-rad-antibodies.com]
- 2. Comprehensive Optimization of Western Blotting - PMC [pmc.ncbi.nlm.nih.gov]
- 3. info.gbiosciences.com [info.gbiosciences.com]
- 4. Fluorescein isothiocyanate-labeled casein assay for proteolytic enzymes - PubMed [pubmed.ncbi.nlm.nih.gov]
- 5. researchgate.net [researchgate.net]
- 6. merckmillipore.com [merckmillipore.com]
- 7. researchgate.net [researchgate.net]
- 8. cdn.caymanchem.com [cdn.caymanchem.com]
- 9. researchgate.net [researchgate.net]
- 10. benchchem.com [benchchem.com]
- To cite this document: BenchChem. [Leupeptin in Protease Inhibitor Cocktails: Application Notes and Protocols for Researchers]. BenchChem, [2026]. [Online PDF]. Available at: [https://www.benchchem.com/product/b15567203/docs#leupeptin-in-protease-inhibitor-cocktails-application-notes-and-protocols-for-researchers]

Disclaimer & Data Validity:

The information provided in this document is for Research Use Only (RUO) and is strictly not intended for diagnostic or therapeutic procedures. While BenchChem strives to provide accurate protocols, we make no warranties, express or implied, regarding the fitness of this product for every specific experimental setup.

Technical Support: The protocols provided are for reference purposes. Unsure if this reagent suits your experiment?

Need Industrial/Bulk Grade? Request Custom Synthesis Quote

BenchChem

Our mission is to be the trusted global source of essential and advanced chemicals, empowering scientists and researchers to drive progress in science and industry.

Contact

Address: 3281 E Guasti Rd

Ontario, CA 91761, United States

Phone: (601) 213-4426

Email: info@benchchem.com

Contact our Ph.D. Support Team for a compatibility check

© 2026 BenchChem. All rights reserved.