Application Notes and Protocols for IspE Kinase Inhibitors in MIC Assays

Author: BenchChem Technical Support Team. **Date**: April 2026

Compound of Interest

Compound Name: *IspE kinase-IN-1*

Cat. No.: *B15565340*

Get Quote

Topic: Recommended Concentration of IspE Kinase Inhibitors for MIC Assays

Audience: Researchers, scientists, and drug development professionals.

Introduction

The 2-C-methyl-D-erythritol 4-phosphate (MEP) pathway is an essential metabolic route for the synthesis of isoprenoids in many bacteria, parasites, and plants, but is absent in mammals.[1][2][3] This makes the enzymes of the MEP pathway attractive targets for the development of novel antimicrobial agents. One such enzyme, 4-diphosphocytidyl-2-C-methyl-D-erythritol kinase (IspE), catalyzes the ATP-dependent phosphorylation of 4-diphosphocytidyl-2-C-methyl-D-erythritol (CDP-ME) to produce 4-diphosphocytidyl-2-C-methyl-D-erythritol 2-phosphate (CDP-ME2P).[1][4] Inhibition of IspE disrupts the MEP pathway, leading to bacterial cell death.

While a specific compound designated "**IspE kinase-IN-1**" is not prominently described in the scientific literature, this document provides a comprehensive guide for determining the recommended concentration of novel or known IspE kinase inhibitors for Minimum Inhibitory Concentration (MIC) assays. The protocols and data presentation formats provided herein are intended to serve as a valuable resource for researchers engaged in the discovery and evaluation of new antimicrobial agents targeting IspE.

© 2026 BenchChem. All rights reserved.

Signaling Pathway

The MEP pathway is a critical route for the biosynthesis of isopentenyl diphosphate (IPP) and dimethylallyl diphosphate (DMAPP), the universal precursors for all isoprenoids. These isoprenoids are vital for various cellular functions, including cell wall biosynthesis, electron transport, and as precursors for signaling molecules. The inhibition of IspE, a key kinase in this pathway, represents a promising strategy for antimicrobial development.

© 2026 BenchChem. All rights reserved.

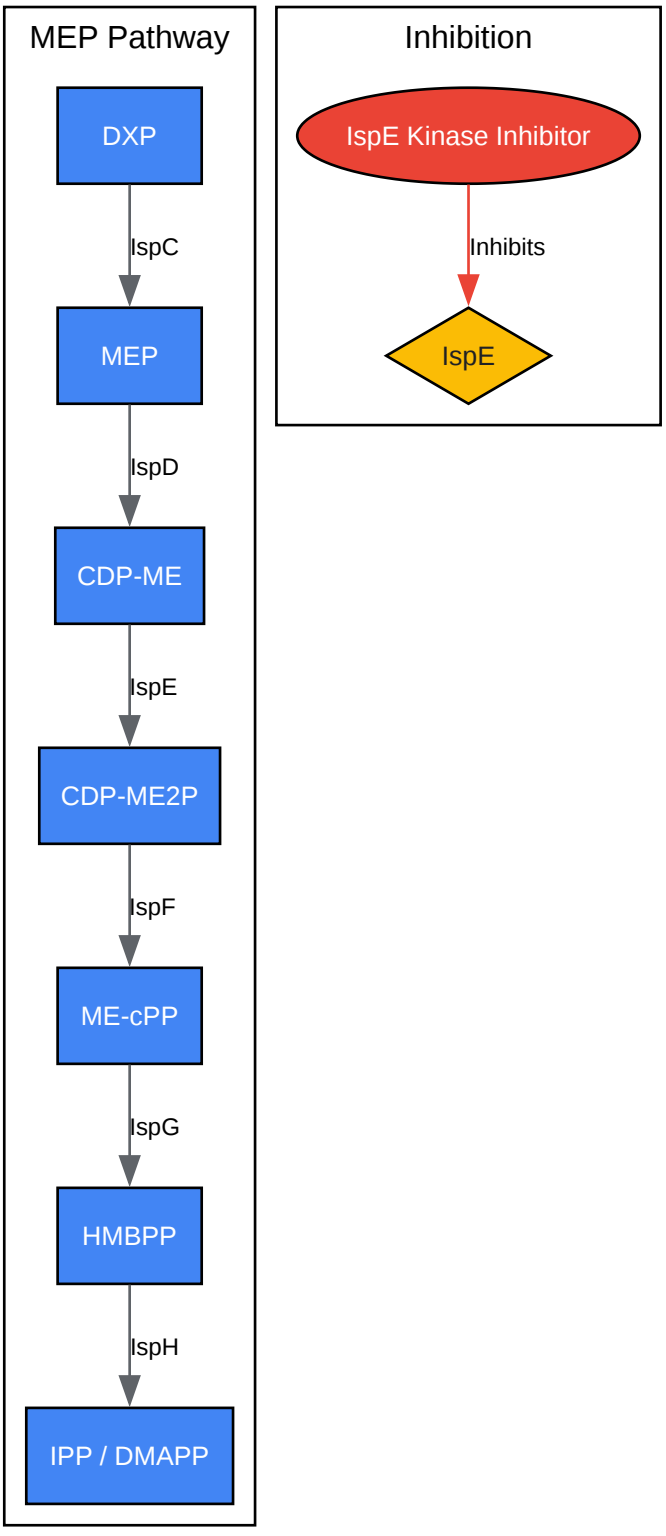

Click to download full resolution via product page

Figure 1: Simplified diagram of the MEP pathway highlighting the role of IspE and its inhibition.

© 2026 BenchChem. All rights reserved.

Experimental Protocols

The following is a detailed protocol for determining the Minimum Inhibitory Concentration (MIC) of an IspE kinase inhibitor using the broth microdilution method. This method is a standard procedure for assessing the in vitro antimicrobial activity of a compound.

Materials:

- IspE kinase inhibitor (stock solution of known concentration)
- Bacterial strains of interest (e.g., Escherichia coli, Klebsiella pneumoniae, Acinetobacter baumannii)
- Cation-adjusted Mueller-Hinton Broth (CAMHB)
- Sterile 96-well microtiter plates
- Spectrophotometer
- Pipettes and sterile tips
- Incubator

Protocol:

- Preparation of Bacterial Inoculum:
  - From a fresh agar plate, select 3-5 colonies of the test bacterium and inoculate into 5 mL of CAMHB.
  - Incubate the culture at 37°C with shaking until it reaches the logarithmic growth phase (typically 2-6 hours).
  - Adjust the turbidity of the bacterial suspension to match a 0.5 McFarland standard, which corresponds to approximately 1-2 x 10^8 CFU/mL.
  - Dilute the adjusted bacterial suspension in CAMHB to achieve a final inoculum concentration of approximately 5 x 10^5 CFU/mL in the test wells.

© 2026 BenchChem. All rights reserved.

- Preparation of Inhibitor Dilutions:
  - Prepare a stock solution of the IspE kinase inhibitor in a suitable solvent (e.g., DMSO).
  - Perform a serial two-fold dilution of the inhibitor in CAMHB in a 96-well plate. The concentration range should be chosen based on the expected potency of the inhibitor. A common starting range is 128 µg/mL to 0.25 µg/mL.
  - The final volume in each well should be 50 µL after dilution.
- Inoculation and Incubation:
  - Add 50 µL of the prepared bacterial inoculum to each well containing the inhibitor dilutions, bringing the total volume to 100 µL.
  - Include a positive control well (bacteria in CAMHB without inhibitor) and a negative control well (CAMHB only).
  - Seal the plate and incubate at 37°C for 16-20 hours.
- Determination of MIC:
  - After incubation, visually inspect the plates for bacterial growth (turbidity).
  - The MIC is defined as the lowest concentration of the inhibitor that completely inhibits visible growth of the bacteria.

© 2026 BenchChem. All rights reserved.

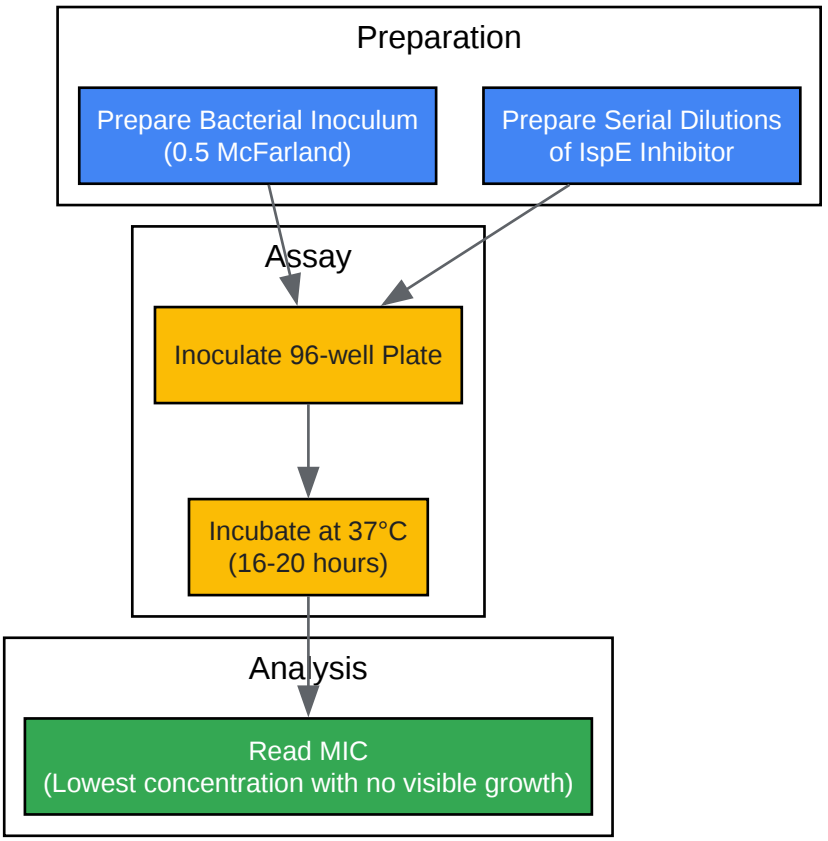

Click to download full resolution via product page

Figure 2: Experimental workflow for determining the MIC of an IspE kinase inhibitor.

Data Presentation

The results of MIC assays should be presented in a clear and organized manner to facilitate comparison of the inhibitor's activity against different bacterial strains.

Table 1: Example MIC Data for a Hypothetical IspE Kinase Inhibitor

© 2026 BenchChem. All rights reserved.

Bacterial Strain	ATCC Number	Gram Stain	MIC (µg/mL)
Escherichia coli	25922	Negative	16
Klebsiella pneumoniae	700603	Negative	32
Acinetobacter baumannii	19606	Negative	8
Pseudomonas aeruginosa	27853	Negative	>128
Staphylococcus aureus	29213	Positive	64

Note: The data presented in this table is for illustrative purposes only and does not represent actual experimental results for a specific compound named "**IspE kinase-IN-1**".

Conclusion

The determination of the MIC is a critical step in the evaluation of novel antimicrobial compounds. The protocols and guidelines presented in these application notes provide a framework for researchers to assess the in vitro efficacy of IspE kinase inhibitors. By targeting the essential MEP pathway, these inhibitors hold promise as a new class of antibiotics to combat bacterial infections. Further studies, including mechanism of action and in vivo efficacy, are necessary to fully characterize the therapeutic potential of any new IspE kinase inhibitor.

Need Custom Synthesis?

BenchChem offers custom synthesis for rare earth carbides and specific isotopiclabeling.

Email: info@benchchem.com or Request Quote Online.

References

- 1. Investigating Novel IspE Inhibitors of the MEP Pathway in Mycobacterium - PMC [pmc.ncbi.nlm.nih.gov]

- 2. Physiological function of IspE, a plastid MEP pathway gene for isoprenoid biosynthesis, in organelle biogenesis and cell morphogenesis in Nicotiana benthamiana - PubMed [pubmed.ncbi.nlm.nih.gov]
- 3. IspE Inhibitors Identified by a Combination of In Silico and In Vitro High-Throughput Screening - PMC [pmc.ncbi.nlm.nih.gov]
- 4. researchgate.net [researchgate.net]
- To cite this document: BenchChem. [Application Notes and Protocols for IspE Kinase Inhibitors in MIC Assays]. BenchChem, [2026]. [Online PDF]. Available at: [https://www.benchchem.com/product/b15565340/docs#application-notes-and-protocols-for-ispe-kinase-inhibitors-in-mic-assays]

Disclaimer & Data Validity:

The information provided in this document is for Research Use Only (RUO) and is strictly not intended for diagnostic or therapeutic procedures. While BenchChem strives to provide accurate protocols, we make no warranties, express or implied, regarding the fitness of this product for every specific experimental setup.

Technical Support: The protocols provided are for reference purposes. Unsure if this reagent suits your experiment?

Need Industrial/Bulk Grade? Request Custom Synthesis Quote

BenchChem

Our mission is to be the trusted global source of essential and advanced chemicals, empowering scientists and researchers to drive progress in science and industry.

Contact

Address: 3281 E Guasti Rd

Ontario, CA 91761, United States

Phone: (601) 213-4426

Email: info@benchchem.com

© 2026 BenchChem. All rights reserved.

Contact our Ph.D. Support Team for a compatibility check

© 2026 BenchChem. All rights reserved.