Technical Support Center: Isotopic Overlap in Mass Spectrometry using Glycidyl Behenate-d5

Author: BenchChem Technical Support Team. **Date**: April 2026

Compound of Interest

Compound Name: *Glycidyl Behenate-d5*

Cat. No.: *B15557825*

Get Quote

Welcome to the Technical Support Center for addressing isotopic overlap and other quantitative challenges when using **Glycidyl Behenate-d5** in mass spectrometry. This resource is designed for researchers, scientists, and drug development professionals to provide troubleshooting guidance and practical solutions for accurate and precise quantification.

Frequently Asked Questions (FAQs)

Q1: What is isotopic overlap and why is it a concern when using **Glycidyl Behenate-d5**?

A1: Isotopic overlap refers to the interference of mass spectral signals between an analyte (Glycidyl Behenate) and its stable isotope-labeled internal standard (**Glycidyl Behenate-d5**). This occurs due to the natural abundance of heavy isotopes (like ^{13}C) in the unlabeled analyte, which can contribute to the signal at the mass-to-charge ratio (m/z) of the deuterated standard. Conversely, isotopic impurities in the deuterated standard (e.g., presence of unlabeled d0 form) can contribute to the analyte's signal. This overlap can lead to inaccuracies in quantification, especially at low analyte concentrations.

Q2: How can I identify if isotopic overlap is affecting my results?

A2: Several indicators may suggest that isotopic overlap is impacting your assay:

© 2026 BenchChem. All rights reserved.

- Non-linear calibration curves: At high concentrations, the contribution from the analyte to the internal standard's signal can become significant, causing the curve to deviate from linearity.
- Inaccurate quality control (QC) samples: QC samples with known concentrations may fall outside of the acceptable accuracy and precision limits.
- Elevated baseline in the internal standard channel: When analyzing a high concentration of the unlabeled analyte without the internal standard, a signal may be observed in the MRM transition of the d5-labeled standard.
- Signal in the analyte channel for a blank with internal standard: Injecting a sample containing only **Glycidyl Behenate-d5** may show a small peak in the analyte's MRM transition due to isotopic impurities.

Q3: What are the primary causes of isotopic interference with **Glycidyl Behenate-d5**?

A3: The two main causes are:

- Natural Isotope Abundance: Glycidyl Behenate naturally contains a small percentage of heavier isotopes, primarily ^{13}C. This can result in a signal at M+1, M+2, etc., which may overlap with the signal of the deuterated internal standard.
- Isotopic Impurity of the Internal Standard: The synthesis of **Glycidyl Behenate-d5** is never 100% complete, leading to the presence of small amounts of unlabeled (d0) or partially labeled (d1-d4) molecules. These impurities will contribute to the signal of the analyte.[1]

Q4: What is the importance of the isotopic purity of **Glycidyl Behenate-d5**?

A4: The isotopic purity of **Glycidyl Behenate-d5** is crucial for accurate quantification. A higher isotopic purity means a lower percentage of the unlabeled (d0) impurity, which minimizes its contribution to the analyte's signal. It is essential to know the isotopic distribution of your internal standard, which is typically provided in the Certificate of Analysis, to apply appropriate correction factors if necessary.

Q5: Can chromatographic separation between Glycidyl Behenate and **Glycidyl Behenate-d5** affect my results?

© 2026 BenchChem. All rights reserved.

A5: Yes. While stable isotope-labeled standards are designed to co-elute with the analyte, slight differences in retention time can sometimes occur, a phenomenon known as the "isotope effect." If the analyte and internal standard do not co-elute perfectly, they may be affected differently by matrix effects, leading to inaccurate quantification.[2] It is important to use a chromatographic method that ensures complete co-elution.

Troubleshooting Guides

Problem 1: Non-Linearity in the Calibration Curve at High Concentrations

- Possible Cause: Isotopic contribution from the high-concentration analyte to the internal standard signal.
- Solution:
  - Assess the contribution: Prepare a high-concentration sample of unlabeled Glycidyl Behenate without the internal standard and monitor the MRM transition of **Glycidyl Behenate-d5**.
  - Apply a correction factor: If a significant signal is observed, a mathematical correction can be applied to subtract the contribution from the internal standard's response.
  - Adjust the calibration range: If possible, narrow the calibration range to the linear portion of the curve.

Problem 2: Significant Signal in the Analyte Channel When Injecting Only the Internal Standard

- Possible Cause: Isotopic impurity (d0) in the **Glycidyl Behenate-d5** internal standard.
- Solution:
  - Quantify the impurity: Analyze a known concentration of the **Glycidyl Behenate-d5** standard and measure the peak area in the analyte's MRM transition. This can be used to calculate the percentage of the d0 impurity.

© 2026 BenchChem. All rights reserved.

- Subtract the contribution: For each sample, the contribution of the d0 impurity to the analyte signal can be calculated and subtracted from the measured analyte response.
- Source a higher purity standard: If the d0 impurity is too high for accurate quantification at the lower limit of quantification (LLOQ), consider obtaining a new batch of the internal standard with higher isotopic purity.

Problem 3: Poor Precision and Accuracy in Quality Control Samples

- Possible Cause 1: Differential matrix effects affecting the analyte and internal standard to different extents.
- Solution 1:
  - Optimize sample cleanup: Employ more rigorous sample preparation techniques like solid-phase extraction (SPE) to remove interfering matrix components.[3]
  - Modify chromatography: Adjust the LC gradient to better separate the analyte and internal standard from matrix interferences. Ensure complete co-elution.
- Possible Cause 2: Inaccurate correction for isotopic overlap.
- Solution 2:
  - Re-evaluate correction factors: Systematically determine the isotopic contribution of the analyte to the internal standard and vice-versa using the experimental protocol outlined below.
  - Use a higher mass-labeled standard: If significant overlap persists, consider using an internal standard with a higher degree of deuteration or a ^{13}C-labeled standard, if available, to shift the mass further from the analyte's isotopic cluster.

Quantitative Data

Table 1: Molecular Weights and Typical Mass Spectrometry Parameters

© 2026 BenchChem. All rights reserved.

Compound	Molecular Formula	Molecular Weight (g/mol)	Precursor Ion (m/z) $[M+H]^+$	Proposed Quantifier Ion (m/z)	Proposed Qualifier Ion (m/z)
Glycidyl Behenate	$C_{25}H_{48}O_3$	396.66	397.7	339.3 (Loss of C_3H_5O)	281.3 (Loss of $C_3H_5O_2$ and C_4H_8)
Glycidyl Behenate-d5	$C_{25}H_{43}D_5O_3$	401.71	402.7	344.3 (Loss of C_3D_5O)	281.3 (Loss of $C_3D_5O_2$ and C_4H_8)

Note: The proposed MRM transitions are based on the common fragmentation patterns of long-chain fatty acid esters and should be optimized for your specific instrument and conditions.[4]

Table 2: Representative Isotopic Purity of a d5-Labeled Glycidyl Ester Standard

Isotopologue	Abundance (%)
d0	0.5
d1	0.2
d2	0.3
d3	1.5
d4	7.5
d5	90.0

Note: This data is illustrative and based on typical specifications for high-purity deuterated standards. Actual lot-to-lot variability will exist. Always refer to the Certificate of Analysis provided by the supplier.[5]

Experimental Protocols

Protocol 1: Determination of Isotopic Overlap

© 2026 BenchChem. All rights reserved.

- Preparation of Stock Solutions:
  - Prepare a 1 mg/mL stock solution of unlabeled Glycidyl Behenate in a suitable solvent (e.g., acetone).
  - Prepare a 1 mg/mL stock solution of **Glycidyl Behenate-d5** in the same solvent.
- Analysis of Analyte Contribution to Internal Standard Channel:
  - Prepare a series of calibration standards of Glycidyl Behenate without the internal standard, covering the expected analytical range.
  - Inject these standards into the LC-MS/MS system and monitor the MRM transition for **Glycidyl Behenate-d5**.
  - Calculate the percentage of the Glycidyl Behenate signal that appears in the internal standard channel at each concentration level.
- Analysis of Internal Standard Contribution to Analyte Channel:
  - Prepare a working solution of **Glycidyl Behenate-d5** at the concentration used in your assay.
  - Inject this solution and monitor the MRM transition for Glycidyl Behenate.
  - Calculate the percentage of the **Glycidyl Behenate-d5** signal that appears in the analyte channel.
- Calculation of Correction Factors:
  - Based on the data from steps 2 and 3, establish correction factors to be applied to the raw peak areas during sample analysis.

Protocol 2: Quantification of Glycidyl Behenate in Edible Oil using LC-MS/MS

- Sample Preparation:

© 2026 BenchChem. All rights reserved.

- Accurately weigh 100 mg of the oil sample into a centrifuge tube.
- Add a known amount of **Glycidyl Behenate-d5** internal standard solution (e.g., 100 µL of a 1 µg/mL solution).
- Add 1.9 mL of acetone and vortex for 1 minute to dissolve the oil.
- Perform solid-phase extraction (SPE) cleanup using a C18 cartridge followed by a silica cartridge for matrix removal.[6]
- Evaporate the final eluate to dryness under a gentle stream of nitrogen.
- Reconstitute the residue in 250 µL of a suitable solvent mixture (e.g., methanol/isopropanol, 1:1, v/v) for LC-MS/MS analysis.[6]

- LC-MS/MS Conditions:
  - LC Column: C18 reversed-phase column (e.g., 150 x 2.1 mm, 3.5 µm).
  - Mobile Phase: A gradient of methanol and water with a suitable modifier (e.g., 0.1% formic acid or ammonium formate).
  - Ionization: Electrospray Ionization (ESI) in positive mode.
  - Scan Mode: Multiple Reaction Monitoring (MRM).
  - MRM Transitions: Monitor the optimized transitions for Glycidyl Behenate and **Glycidyl Behenate-d5** (refer to Table 1 for proposed transitions).

Visualizations

© 2026 BenchChem. All rights reserved.

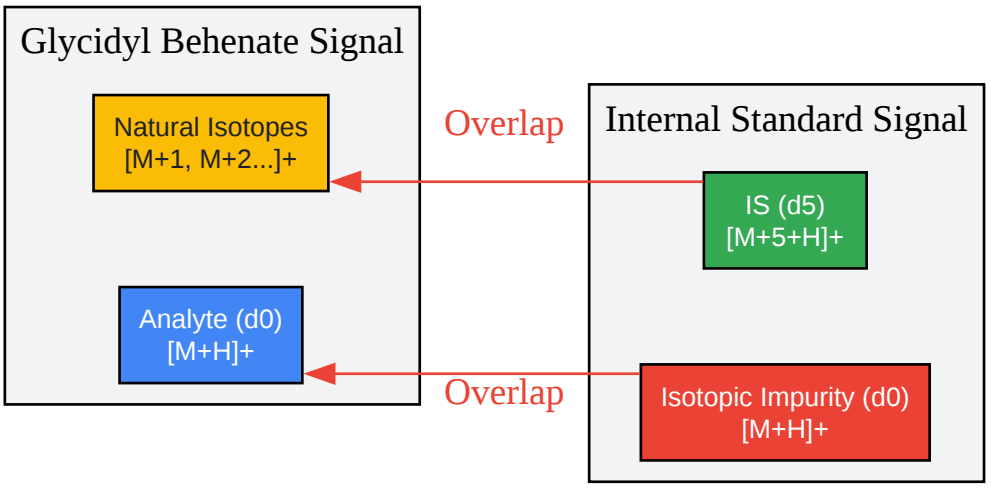

Click to download full resolution via product page

Caption: Logical diagram illustrating isotopic overlap between the analyte and its deuterated internal standard.

© 2026 BenchChem. All rights reserved.

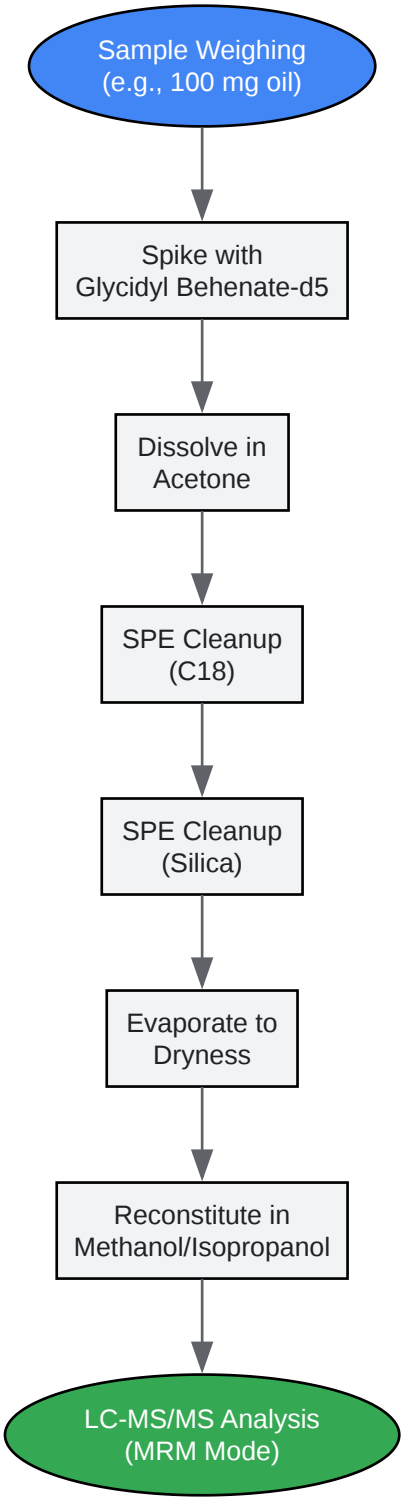

Click to download full resolution via product page

Caption: Experimental workflow for the quantification of Glycidyl Behenate in edible oils.

© 2026 BenchChem. All rights reserved.

Need Custom Synthesis?

BenchChem offers custom synthesis for rare earth carbides and specific isotopiclabeling.

Email: info@benchchem.com or Request Quote Online.

References

- 1. researchgate.net [researchgate.net]
- 2. Direct Determination of Glycidyl Esters of Fatty Acids in Vegetable Oils by LC–MS - PMC [pmc.ncbi.nlm.nih.gov]
- 3. benchchem.com [benchchem.com]
- 4. Mass Spectrometric Analysis of Long-Chain Lipids - PMC [pmc.ncbi.nlm.nih.gov]
- 5. benchchem.com [benchchem.com]
- 6. Glycidyl fatty acid esters in food by LC-MS/MS: method development - PubMed [pubmed.ncbi.nlm.nih.gov]

- To cite this document: BenchChem. [Technical Support Center: Isotopic Overlap in Mass Spectrometry using Glycidyl Behenate-d5]. BenchChem, [2026]. [Online PDF]. Available at: [https://www.benchchem.com/product/b15557825/docs#technical-support-center-isotopic-overlap-in-mass-spectrometry-using-glycidyl-behenate-d5]

Disclaimer & Data Validity:

The information provided in this document is for Research Use Only (RUO) and is strictly not intended for diagnostic or therapeutic procedures. While BenchChem strives to provide accurate protocols, we make no warranties, express or implied, regarding the fitness of this product for every specific experimental setup.

Technical Support: The protocols provided are for reference purposes. Unsure if this reagent suits your experiment?

Need Industrial/Bulk Grade? Request Custom Synthesis Quote

© 2026 BenchChem. All rights reserved.

BenchChem

Our mission is to be the trusted global source of essential and advanced chemicals, empowering scientists and researchers to drive progress in science and industry.

Contact

Address: 3281 E Guasti Rd

Ontario, CA 91761, United States

Phone: (601) 213-4426

Email: info@benchchem.com

Contact our Ph.D. Support Team for a compatibility check

© 2026 BenchChem. All rights reserved.