D149 dye alternative names and CAS number

Author: BenchChem Technical Support Team. **Date**: April 2026

Compound of Interest

Compound Name:	*D149 Dye*
Cat. No.:	*B15553625*

Get Quote

An In-depth Technical Guide to the Sensitizing Dye D149

For researchers, scientists, and professionals in the fields of materials science and renewable energy, D149 is a significant metal-free organic dye. This guide provides a comprehensive overview of its properties, alternative names, and CAS number, along with detailed experimental protocols and a summary of its key performance indicators in dye-sensitized solar cells (DSSCs).

Alternative Names and CAS Number

The **D149 dye** is known by several names in scientific literature and commercial listings. Its unambiguous identifier is its CAS number.

- Common Name: **D149 Dye**[1]
- Systematic Name: 5-[[4-[4-(2,2-Diphenylethenyl)phenyl]-1,2,3-3a,4,8b-hexahydrocyclopent[b]indol-7-yl]methylene]-2-(3-ethyl-4-oxo-2-thioxo-5-thiazolidinylidene)-4-oxo-3-thiazolidineacetic acid[2][3]
- Synonyms: Indoline dye D149, Purple Dye[3][4]
- CAS Number: 786643-20-7[4][5]

© 2026 BenchChem. All rights reserved.

Physicochemical and Photovoltaic Properties

D149 is an indoline-based dye recognized for its high molar extinction coefficient, making it an effective sensitizer for semiconductor materials in DSSCs.[1][6] A summary of its key properties is presented in the table below.

Property	Value	Reference(s)
Molecular Formula	$C_{42}H_{35}N_3O_4S_3$	[4][5]
Molecular Weight	741.94 g/mol	[4][5]
Appearance	Light brown to black solid	[1]
CAS Number	786643-20-7	[4][5]
Extinction Coefficient	68,700 $M^{-1}cm^{-1}$ at 540 nm	[1][6]
Solubility	DMSO: ≥ 21 mg/mL (28.30 mM)	[7]
Power Conversion Efficiency (η)	Up to 9%	[1][6]
Open-circuit Voltage (Voc)	708.6 mV	[8]
Short-circuit Current Density (Jsc)	14.05 mA/cm^2	[8]
Fill factor (ff)	0.67	[8]

Experimental Protocols

Detailed methodologies are crucial for the replication and advancement of research. Below are protocols for the preparation of a **D149 dye** solution and the fabrication of a dye-sensitized solar cell.

Protocol 1: Preparation of D149 Dye Solution

This protocol outlines the preparation of a **D149 dye** solution for sensitizing a TiO_2 film.

Materials:

© 2026 BenchChem. All rights reserved.

- **D149 dye**
- Acetonitrile (HPLC grade)
- tert-Butanol (LR grade)

Procedure:

- Prepare a 0.5 mM solution of **D149 dye** in a 1:1 (v/v) mixture of acetonitrile and tert-butanol.[1]
- Ensure the dye is fully dissolved, using sonication if necessary.
- The porous TiO_2 films are immersed in this solution overnight after their temperature has cooled to approximately 110°C.[1]
- Following immersion, the films are removed from the dye bath, washed with acetonitrile to remove non-adsorbed dye, and then dried.[1]

Protocol 2: Assembly of a Dye-Sensitized Solar Cell

This protocol describes the assembly of a sandwich-type DSSC using a D149-sensitized photoanode.

Materials:

- D149-sensitized TiO_2 working electrode
- Platinum (Pt) counter electrode
- Surlyn spacer (25 µm)
- I^-/I_3^- organic solvent-based electrolyte solution (e.g., 50 mM iodine, 0.6 M 1,2-dimethyl-3-propylimidazolium iodide, 0.1 M lithium iodide in methoxypropionitrile)[1]
- Aluminum foil-backed Surlyn

Procedure:

© 2026 BenchChem. All rights reserved.

- The D149-sensitized working electrode and the Pt counter electrode are assembled into a sandwich-type cell.[1]
- A 25 µm Surlyn spacer is used to seal the electrodes together.[1]
- The electrolyte solution is introduced into the cell via vacuum back-filling.[1]
- The filling hole is sealed with a piece of aluminum foil-backed Surlyn to prevent leakage.[1]

Electron Transfer Pathway and Experimental Workflow

To visualize the operational principle of a D149-based DSSC and the general experimental procedure, the following diagrams are provided.

© 2026 BenchChem. All rights reserved.

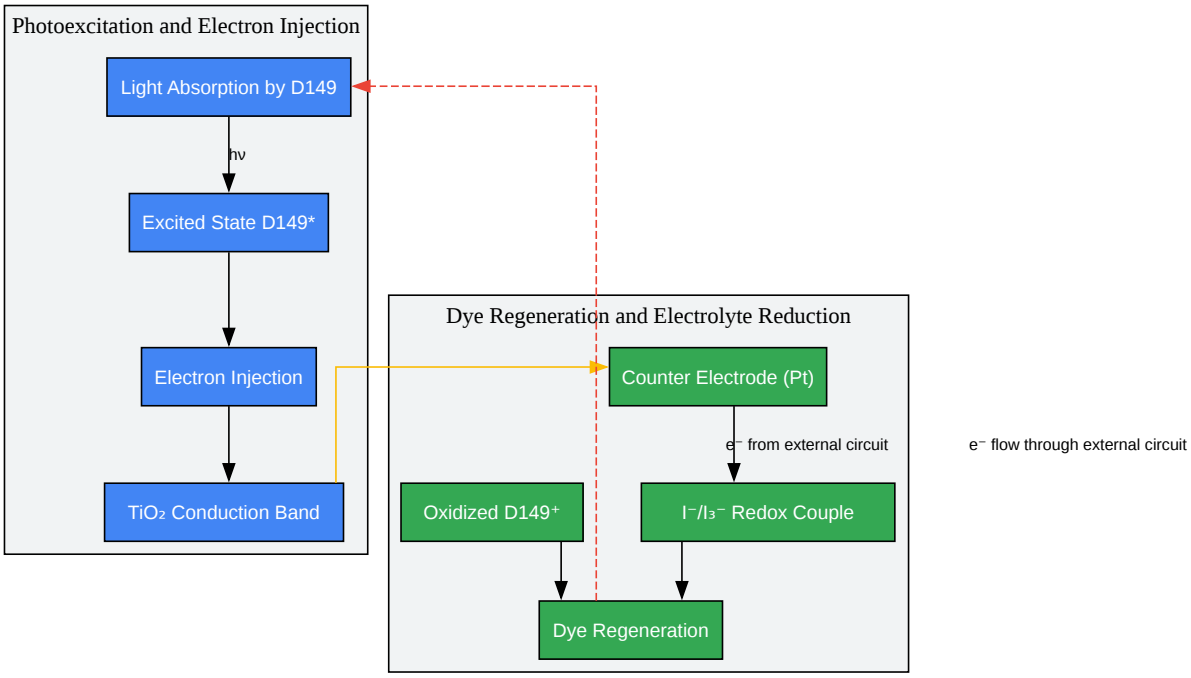

© 2026 BenchChem. All rights reserved.

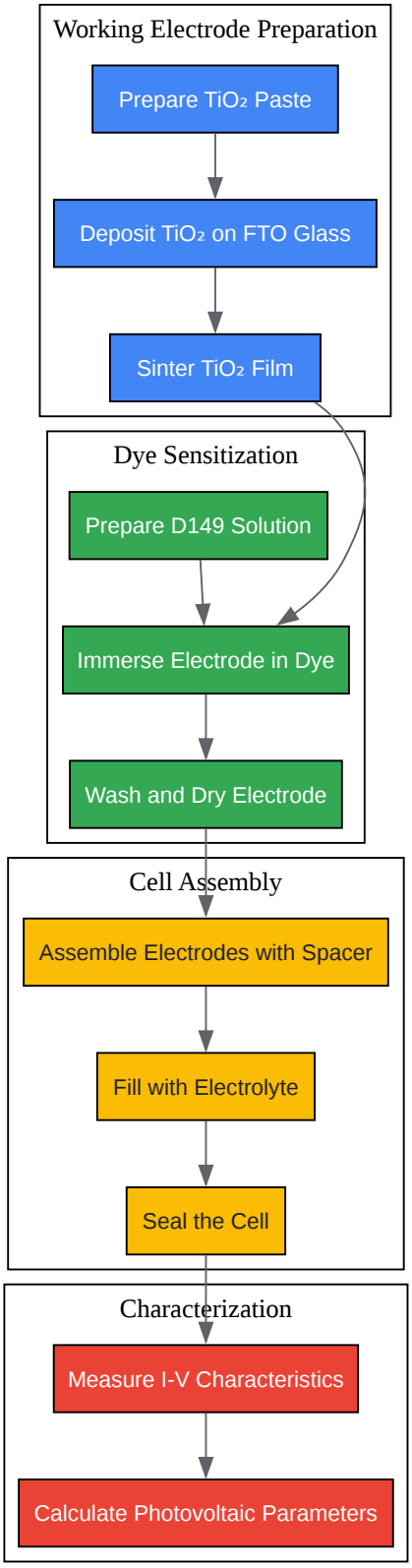

Click to download full resolution via product page

© 2026 BenchChem. All rights reserved.

Need Custom Synthesis?

BenchChem offers custom synthesis for rare earth carbides and specific isotopiclabeling.

Email: info@benchchem.com or Request Quote Online.

References

- 1. medchemexpress.com [medchemexpress.com]
- 2. researchgate.net [researchgate.net]
- 3. [PDF] Ultrafast photoinduced relaxation dynamics of the indoline dye D149 in organic solvents. | Semantic Scholar [semanticscholar.org]
- 4. Isomerization and Aggregation of the Solar Cell Dye D149 - PMC [pmc.ncbi.nlm.nih.gov]
- 5. cdnsciencepub.com [cdnsciencepub.com]
- 6. Isomerization and Aggregation of the Solar Cell Dye D149 - PubMed [pubmed.ncbi.nlm.nih.gov]
- 7. researchgate.net [researchgate.net]
- 8. Improved performance of D149 dye-sensitized ZnO-based solar cell under solvents activation effect | Semantic Scholar [semanticscholar.org]
- To cite this document: BenchChem. [D149 dye alternative names and CAS number]. BenchChem, [2026]. [Online PDF]. Available at: [https://www.benchchem.com/product/b15553625/docs#d149-dye-alternative-names-and-cas-number]

Disclaimer & Data Validity:

The information provided in this document is for Research Use Only (RUO) and is strictly not intended for diagnostic or therapeutic procedures. While BenchChem strives to provide accurate protocols, we make no warranties, express or implied, regarding the fitness of this product for every specific experimental setup.

Technical Support: The protocols provided are for reference purposes. Unsure if this reagent suits your experiment?

Need Industrial/Bulk Grade? Request Custom Synthesis Quote

© 2026 BenchChem. All rights reserved.

BenchChem

Our mission is to be the trusted global source of essential and advanced chemicals, empowering scientists and researchers to drive progress in science and industry.

Contact

Address: 3281 E Guasti Rd

Ontario, CA 91761, United States

Phone: (601) 213-4426

Email: info@benchchem.com

Contact our Ph.D. Support Team for a compatibility check

© 2026 BenchChem. All rights reserved.