The Role of CK2-IN-13 in Apoptosis: A Technical Guide

Author: BenchChem Technical Support Team. **Date**: April 2026

Compound of Interest

Compound Name: *CK2-IN-13*

Cat. No.: *B15543648*

Get Quote

For Researchers, Scientists, and Drug Development Professionals

Introduction

Protein Kinase CK2 (formerly Casein Kinase II) is a highly conserved, ubiquitously expressed serine/threonine kinase that plays a critical role in a vast array of cellular processes, including cell growth, proliferation, and survival.[1][2] Structurally, CK2 is a tetrameric holoenzyme composed of two catalytic subunits (α and/or α') and two regulatory β subunits.[1][3] A significant body of evidence has established CK2 as a potent suppressor of apoptosis, the cell's intrinsic program for self-destruction.[1][4] Its anti-apoptotic function is a key contributor to its role in tumorigenesis, as elevated levels of CK2 are observed in a wide range of cancers, where it helps malignant cells evade programmed cell death.[4][5]

The inhibition of CK2 has therefore emerged as a promising therapeutic strategy for cancer.[4] Small molecule inhibitors targeting the ATP-binding site of CK2's catalytic subunits can disrupt its pro-survival signaling, leading to the induction of apoptosis in cancer cells.[6] This technical guide focuses on the role of a specific CK2 inhibitor, **CK2-IN-13**, in the induction of apoptosis, providing an in-depth overview of its mechanism of action, the signaling pathways involved, and detailed experimental protocols for its investigation.

© 2026 BenchChem. All rights reserved.

Mechanism of Action: CK2 Inhibition and the Induction of Apoptosis

CK2 exerts its anti-apoptotic effects through the phosphorylation of a multitude of substrate proteins involved in both the intrinsic (mitochondrial) and extrinsic (death receptor) apoptotic pathways.[4][7] By phosphorylating and modulating the activity of these key proteins, CK2 shifts the cellular balance towards survival. The introduction of a CK2 inhibitor like **CK2-IN-13** disrupts this pro-survival signaling, thereby sensitizing cancer cells to apoptotic stimuli.

The primary mechanism by which CK2 inhibitors induce apoptosis is by preventing the phosphorylation of key downstream targets. This leads to:

- Activation of Pro-Apoptotic Proteins: CK2 is known to phosphorylate and inactivate pro-apoptotic proteins such as members of the Bcl-2 family. Inhibition of CK2 can lead to the dephosphorylation and activation of these proteins, triggering the mitochondrial apoptotic cascade.[7]

- Downregulation of Anti-Apoptotic Proteins: The activity of anti-apoptotic proteins, such as IAPs (Inhibitor of Apoptosis Proteins), can be diminished upon CK2 inhibition, further promoting apoptosis.[8]

- Modulation of Key Survival Pathways: CK2 is a key regulator of major pro-survival signaling pathways, including PI3K/Akt and NF-κB.[7][9] Inhibition of CK2 disrupts these pathways, reducing the expression of survival genes and promoting apoptosis.

Core Signaling Pathways Modulated by CK2-IN-13

The induction of apoptosis by **CK2-IN-13** is a consequence of its impact on several interconnected signaling pathways that are critical for cell survival.

The PI3K/Akt Signaling Pathway

The Phosphoinositide 3-kinase (PI3K)/Akt pathway is a central regulator of cell survival, proliferation, and metabolism.[10] CK2 positively regulates this pathway at multiple levels. It can directly phosphorylate and enhance the activity of Akt.[9] Furthermore, CK2 can phosphorylate and inhibit the tumor suppressor PTEN, a negative regulator of the PI3K/Akt pathway.[11] By inhibiting CK2, **CK2-IN-13** is expected to decrease Akt activation, leading to

© 2026 BenchChem. All rights reserved.

reduced phosphorylation of its downstream targets and a subsequent increase in pro-apoptotic signaling.

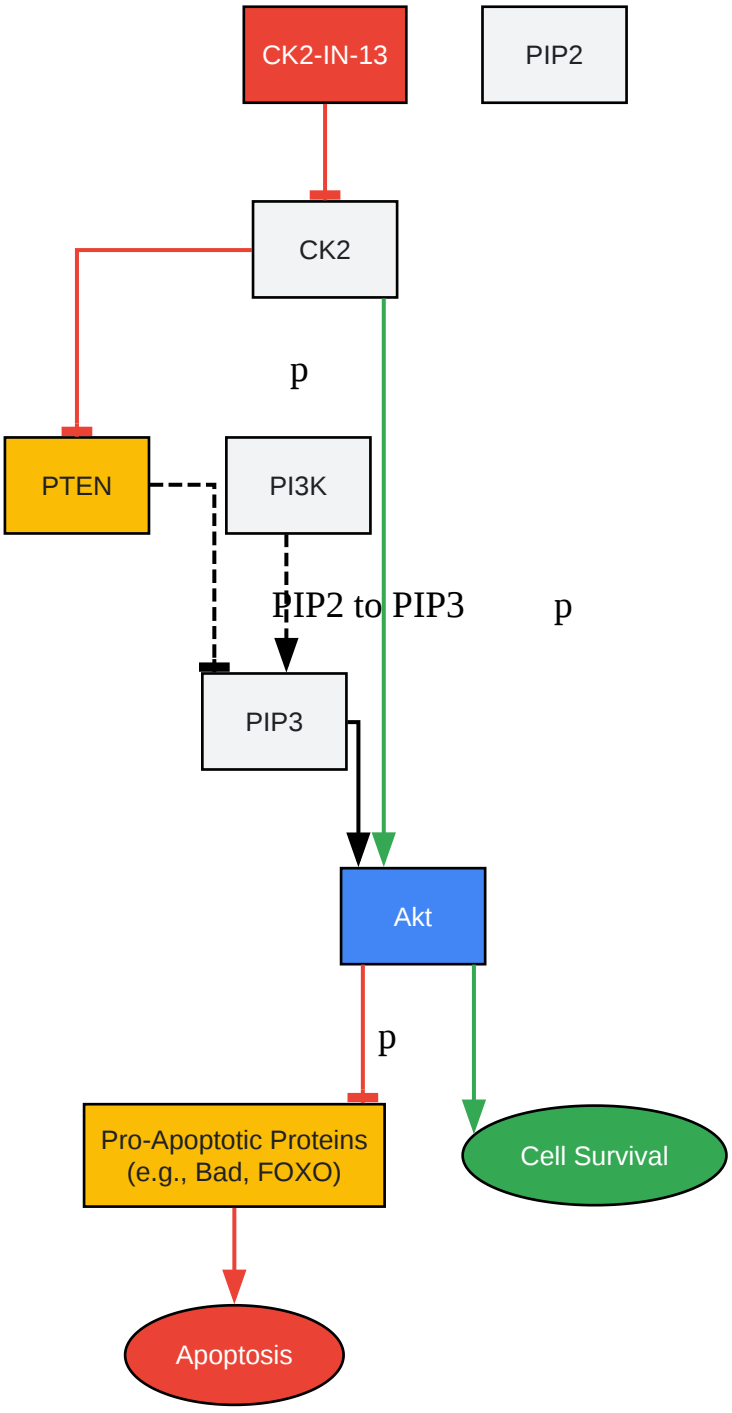

Click to download full resolution via product page

CK2-IN-13 inhibits the pro-survival PI3K/Akt pathway.

© 2026 BenchChem. All rights reserved.

The NF-κB Signaling Pathway

Nuclear Factor-kappa B (NF-κB) is a transcription factor that plays a pivotal role in inflammation, immunity, and cell survival.[9] Constitutive activation of NF-κB is a hallmark of many cancers, contributing to their resistance to apoptosis. CK2 can promote NF-κB activation by phosphorylating its inhibitor, IκBα, which targets it for proteasomal degradation.[7] The inhibition of CK2 by **CK2-IN-13** is anticipated to stabilize IκBα, leading to the sequestration of NF-κB in the cytoplasm and the downregulation of its anti-apoptotic target genes.

© 2026 BenchChem. All rights reserved.

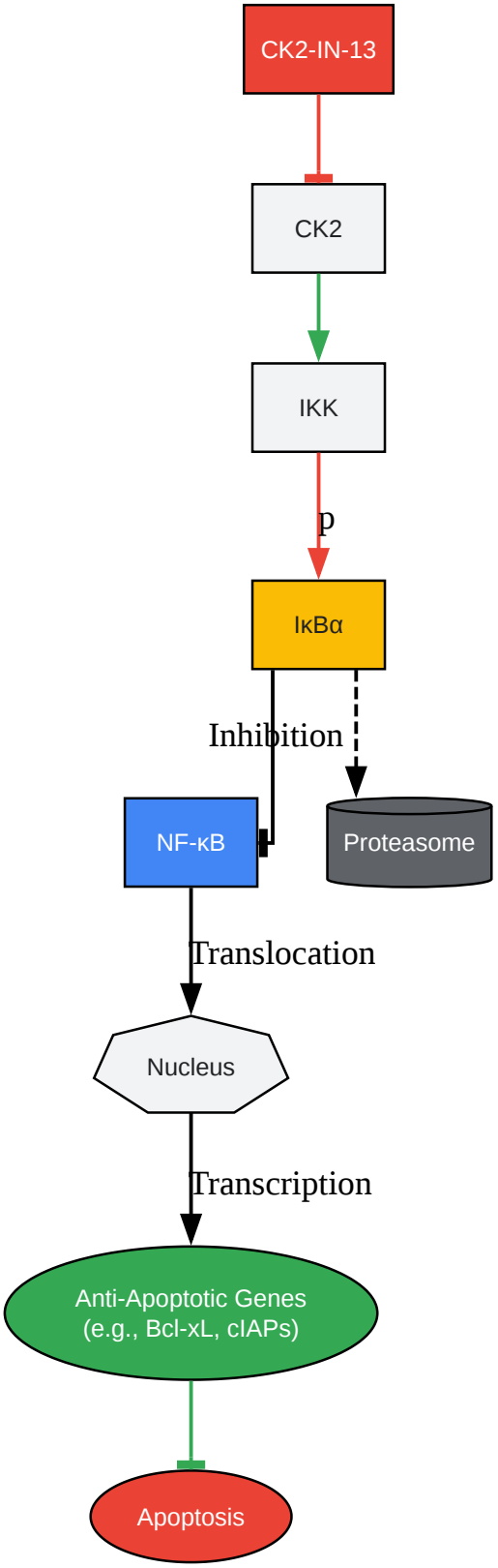

Click to download full resolution via product page

CK2-IN-13 mediated inhibition of the NF-κB pathway.

© 2026 BenchChem. All rights reserved.

Quantitative Data on CK2 Inhibition and Apoptosis

While specific quantitative data for **CK2-IN-13** is not extensively available in the public domain, the pro-apoptotic effects of other well-characterized CK2 inhibitors have been documented. This data serves as a valuable reference for designing experiments and understanding the potential efficacy of **CK2-IN-13**.

Table 1: IC50 Values of Various CK2 Inhibitors in Cancer Cell Lines

Inhibitor	Cell Line	Cancer Type	IC50 (μM) for Cell Viability	Reference
CX-4945	U937	Acute Myeloid Leukemia	3.79	[12]
Quinalizarin	H460	Non-Small Cell Lung Cancer	~25 (used concentration)	[13]
TBB	MOLT-4	Leukemia	28.0	[14]
TBB	HCT116	Colon Cancer	31.5	[14]

Table 2: Apoptosis Induction by CK2 Inhibition

Inhibitor	Cell Line	Cancer Type	Treatment	% Apoptotic Cells	Reference
Quinalizarin (25 μM)	A549	Non-Small Cell Lung Cancer	24h	7.95 ± 0.70	[13]
Quinalizarin (25 μM)	H460	Non-Small Cell Lung Cancer	24h	31.32 ± 0.46	[13]
CX-4945 (20 μM)	786-O	Renal Carcinoma	72h	Caspase-3 activation observed	[15]

© 2026 BenchChem. All rights reserved.

Table 3: Placeholder for **CK2-IN-13** Quantitative Data

Cell Line	Cancer Type	IC50 (μM) for Apoptosis	% Apoptosis at [X] μM
e.g., HeLa	Cervical Cancer	Data to be determined	Data to be determined
e.g., PC-3	Prostate Cancer	Data to be determined	Data to be determined

Experimental Protocols

To investigate the role of **CK2-IN-13** in apoptosis, a series of well-established cellular and biochemical assays can be employed.

Experimental Workflow

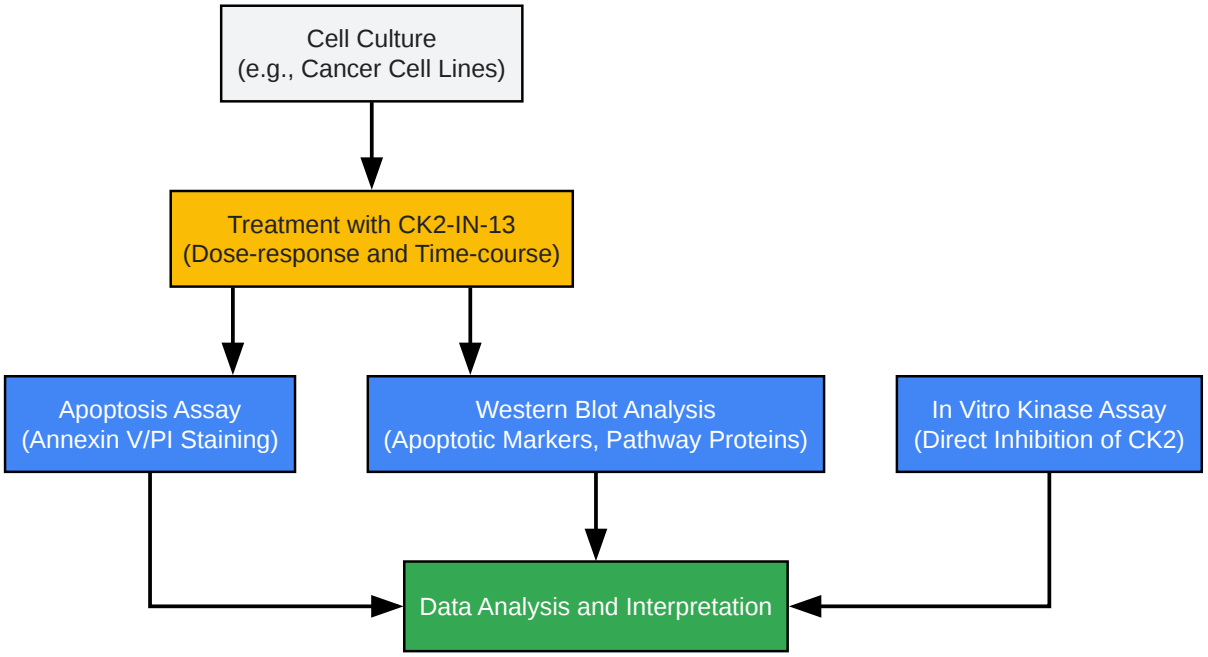

Click to download full resolution via product page

A general workflow for investigating **CK2-IN-13**'s role in apoptosis.

Protocol 1: Apoptosis Detection by Annexin V and Propidium Iodide (PI) Staining

© 2026 BenchChem. All rights reserved.

This flow cytometry-based assay quantitatively determines the percentage of cells undergoing apoptosis.

Materials:

- Target cancer cell line
- **CK2-IN-13**
- Annexin V-FITC (or other fluorescent conjugate)
- Propidium Iodide (PI)
- 1X Annexin V Binding Buffer
- Phosphate-Buffered Saline (PBS)
- Flow cytometer

Procedure:

- Cell Seeding and Treatment:
  - Seed cells in 6-well plates at a density that will allow for approximately 70-80% confluency at the time of harvest.
  - Treat cells with varying concentrations of **CK2-IN-13** (e.g., 0.1, 1, 10, 25 µM) and a vehicle control (e.g., DMSO) for desired time points (e.g., 24, 48, 72 hours).
- Cell Harvesting:
  - For adherent cells, collect the culture medium (containing floating apoptotic cells) and wash the adherent cells with PBS. Detach the adherent cells using trypsin-EDTA, and combine them with the collected medium.
  - For suspension cells, directly collect the cells.
  - Centrifuge the cell suspension at 300 x g for 5 minutes and discard the supernatant.

© 2026 BenchChem. All rights reserved.

- Staining:
  - Wash the cell pellet twice with cold PBS.
  - Resuspend the cells in 1X Annexin V Binding Buffer to a concentration of 1 x 10^6 cells/mL.
  - Transfer 100 µL of the cell suspension to a flow cytometry tube.
  - Add 5 µL of Annexin V-FITC and 5 µL of PI.
  - Gently vortex and incubate for 15 minutes at room temperature in the dark.[14]
- Flow Cytometry Analysis:
  - Add 400 µL of 1X Annexin V Binding Buffer to each tube.
  - Analyze the samples on a flow cytometer within one hour.[14]
  - Live cells: Annexin V-negative, PI-negative.
  - Early apoptotic cells: Annexin V-positive, PI-negative.
  - Late apoptotic/necrotic cells: Annexin V-positive, PI-positive.

Protocol 2: Western Blot Analysis of Apoptotic Markers

This protocol is used to detect changes in the expression and cleavage of key proteins involved in apoptosis following treatment with **CK2-IN-13**.

Materials:

- Treated cell lysates
- RIPA lysis buffer with protease and phosphatase inhibitors
- BCA Protein Assay Kit
- SDS-PAGE gels

© 2026 BenchChem. All rights reserved.

- PVDF membrane
- Blocking buffer (e.g., 5% non-fat milk or BSA in TBST)
- Primary antibodies (e.g., anti-PARP, anti-cleaved Caspase-3, anti-Bcl-2, anti-Bax, anti-p-Akt (Ser473), anti-Akt, anti-β-actin)
- HRP-conjugated secondary antibodies
- Enhanced chemiluminescence (ECL) substrate
- Chemiluminescence imaging system

Procedure:

- Cell Lysis and Protein Quantification:
  - After treatment with **CK2-IN-13**, wash cells with ice-cold PBS and lyse in RIPA buffer.
  - Centrifuge lysates at 14,000 x g for 15 minutes at 4°C to pellet debris.
  - Determine the protein concentration of the supernatant using a BCA assay.
- SDS-PAGE and Protein Transfer:
  - Normalize protein concentrations and prepare samples with Laemmli buffer.
  - Separate proteins on an SDS-PAGE gel.
  - Transfer proteins to a PVDF membrane.
- Immunoblotting:
  - Block the membrane in blocking buffer for 1 hour at room temperature.
  - Incubate the membrane with primary antibodies overnight at 4°C.
  - Wash the membrane three times with TBST.

© 2026 BenchChem. All rights reserved.

- Incubate with the appropriate HRP-conjugated secondary antibody for 1 hour at room temperature.
- Wash the membrane three times with TBST.

- Detection and Analysis:
  - Apply ECL substrate and visualize protein bands using an imaging system.
  - Perform densitometric analysis to quantify band intensities, normalizing to a loading control like β-actin.

Protocol 3: In Vitro CK2 Kinase Assay

This assay directly measures the inhibitory effect of **CK2-IN-13** on the enzymatic activity of CK2.

Materials:

- Recombinant human CK2 holoenzyme
- Specific CK2 peptide substrate (e.g., RRRADDSDDDDD)
- **CK2-IN-13**
- ATP (can be radiolabeled [γ-^{32}P]ATP or used with a non-radioactive ADP detection kit like ADP-Glo™)
- Kinase reaction buffer (e.g., 25 mM Tris-HCl pH 7.5, 150 mM NaCl, 10 mM $MgCl_2$, 1 mM DTT)
- Method for detection (e.g., phosphocellulose paper and scintillation counter for radioactive assay, or luminometer for ADP-Glo™ assay)

Procedure:

- Reaction Setup:

© 2026 BenchChem. All rights reserved.

- In a microplate, combine the kinase reaction buffer, recombinant CK2 enzyme, and the specific peptide substrate.
- Add varying concentrations of **CK2-IN-13** or a vehicle control.

- Initiate Reaction:
  - Start the reaction by adding ATP.
  - Incubate at 30°C for a specified time (e.g., 10-30 minutes).
- Detection:
  - Radioactive method: Spot the reaction mixture onto phosphocellulose paper, wash away unincorporated [γ-^{32}P]ATP, and measure the incorporated radioactivity using a scintillation counter.
  - Non-radioactive method (e.g., ADP-Glo™): Stop the kinase reaction and measure the amount of ADP produced according to the manufacturer's protocol using a luminometer. [16][17]
- Data Analysis:
  - Calculate the percentage of CK2 activity inhibition for each concentration of **CK2-IN-13**.
  - Determine the IC50 value of **CK2-IN-13** for CK2 inhibition.

Conclusion

The role of Protein Kinase CK2 as a potent suppressor of apoptosis is well-established, making it a prime target for anti-cancer drug development.[1][4] While comprehensive data on **CK2-IN-13** is still emerging, its function as a CK2 inhibitor strongly suggests its potential to induce apoptosis in cancer cells by disrupting key pro-survival signaling pathways such as PI3K/Akt and NF-κB. The experimental protocols detailed in this guide provide a robust framework for researchers and drug development professionals to thoroughly investigate the anti-cancer properties of **CK2-IN-13** and similar compounds. Further studies are warranted to fully elucidate the specific molecular interactions and therapeutic potential of **CK2-IN-13** in various cancer contexts.

© 2026 BenchChem. All rights reserved.

Need Custom Synthesis?

BenchChem offers custom synthesis for rare earth carbides and specific isotopiclabeling.

Email: info@benchchem.com or Request Quote Online.

References

- 1. Protein Kinase CK2 - A Key Suppressor of Apoptosis - PMC [pmc.ncbi.nlm.nih.gov]
- 2. Protein kinase CK2: structure, regulation and role in cellular decisions of life and death - PMC [pmc.ncbi.nlm.nih.gov]
- 3. mdpi.com [mdpi.com]
- 4. CK2: A key player in cancer biology - PMC [pmc.ncbi.nlm.nih.gov]
- 5. CK2 in Cancer: Cellular and Biochemical Mechanisms and Potential Therapeutic Target [mdpi.com]
- 6. What are CK2 inhibitors and how do they work? [synapse.patsnap.com]
- 7. benchchem.com [benchchem.com]
- 8. Impact of protein kinase CK2 on inhibitor of apoptosis proteins in prostate cancer cells - PubMed [pubmed.ncbi.nlm.nih.gov]
- 9. Targeting Protein Kinase CK2 Suppresses Pro-survival Signaling Pathways and Growth of Glioblastoma - PMC [pmc.ncbi.nlm.nih.gov]
- 10. researchgate.net [researchgate.net]
- 11. Protein Kinase CK2 Inhibition Represents a Pharmacological Chance for the Treatment of Skin Diseases - PMC [pmc.ncbi.nlm.nih.gov]
- 12. mdpi.com [mdpi.com]
- 13. researchgate.net [researchgate.net]
- 14. benchchem.com [benchchem.com]
- 15. Cancer selective cell death induction by a bivalent CK2 inhibitor targeting the ATP site and the allosteric αD pocket - PMC [pmc.ncbi.nlm.nih.gov]
- 16. CK2 alpha 1 Kinase Enzyme System Application Note [worldwide.promega.com]
- 17. Kinase activity assays Src and CK2 [protocols.io]

© 2026 BenchChem. All rights reserved.

- To cite this document: BenchChem. [The Role of CK2-IN-13 in Apoptosis: A Technical Guide]. BenchChem, [2026]. [Online PDF]. Available at: [https://www.benchchem.com/product/b15543648/docs#the-role-of-ck2-in-13-in-apoptosis-a-technical-guide]

Disclaimer & Data Validity:

The information provided in this document is for Research Use Only (RUO) and is strictly not intended for diagnostic or therapeutic procedures. While BenchChem strives to provide accurate protocols, we make no warranties, express or implied, regarding the fitness of this product for every specific experimental setup.

Technical Support: The protocols provided are for reference purposes. Unsure if this reagent suits your experiment?

Need Industrial/Bulk Grade? Request Custom Synthesis Quote

BenchChem

Our mission is to be the trusted global source of essential and advanced chemicals, empowering scientists and researchers to drive progress in science and industry.

Contact

Address: 3281 E Guasti Rd

Ontario, CA 91761, United States

Phone: (601) 213-4426

Email: info@benchchem.com

Contact our Ph.D. Support Team for a compatibility check