Introduction: The Strategic Role of the Tosyl Group in Modern Synthesis

Author: BenchChem Technical Support Team. **Date**: May 2026

Compound of Interest

Compound Name:	*trans-VH032-Cyclopropane-F-C-cyclohexane-p-C-OTs*
Cat. No.:	*B15542799*

Get Quote

In the landscape of organic synthesis, the transformation of functional groups is a cornerstone of molecular construction. Among the most fundamental and frequently encountered challenges is the conversion of alcohols, which are abundant and readily available, into other functionalities. However, the hydroxyl (-OH) group is a notoriously poor leaving group due to the high basicity of the hydroxide ion (HO^-)[1][2]. The p-toluenesulfonyl group, or "tosyl" group (Ts), provides an elegant and highly effective solution to this problem.

The primary function of the tosyl group is to convert the hydroxyl group of an alcohol into a tosylate ester (-OTs). This transformation dramatically alters the electronic properties of the oxygen atom, making the tosylate anion an exceptionally good leaving group[3][4]. This conversion unlocks a vast array of synthetic possibilities, primarily through nucleophilic substitution reactions, which are pivotal in the synthesis of pharmaceuticals and other complex organic molecules[5]. This guide provides a comprehensive overview of the principles, reaction conditions, and detailed protocols for the nucleophilic substitution of tosylates, designed for researchers and professionals in drug development and the chemical sciences.

The Tosylate Anion: A Superior Leaving Group

© 2026 BenchChem. All rights reserved.

The efficacy of the tosylate group stems from the remarkable stability of the tosylate anion (TsO^-) that is formed upon its departure. This stability can be attributed to two key factors:

- Resonance Stabilization: The negative charge on the oxygen atom is not localized; instead, it is delocalized across the entire sulfonyl group through resonance with the two other oxygen atoms[6]. This distribution of charge significantly lowers the energy of the anion, making it very stable and thus an excellent leaving group.

- Weak Basicity: The tosylate anion is the conjugate base of p-toluenesulfonic acid (TsOH), a strong acid with a pKa of approximately -2.8. A fundamental principle in organic chemistry is that weak bases are good leaving groups[4][7]. The tosylate anion's extreme weakness as a base means it is very stable on its own and readily departs from the substrate.

Compared to other common leaving groups, tosylates are generally considered superior to halides like bromide and chloride for several reasons, including their often crystalline nature which aids in purification and the stereochemical control they offer in the initial activation step[8][9].

Synthesis of Alkyl Tosylates: Activating the Alcohol

Before a nucleophilic substitution can occur, the alcohol must first be converted into the corresponding alkyl tosylate. This is a reliable and well-established procedure that proceeds with retention of stereochemistry at the carbon atom bearing the hydroxyl group, as the C-O bond of the alcohol is not broken during this step[3][10][11].

The reaction involves treating the alcohol with p-toluenesulfonyl chloride (TsCl) in the presence of a non-nucleophilic base, most commonly pyridine or triethylamine (TEA)[10]. The alcohol's oxygen atom acts as a nucleophile, attacking the electrophilic sulfur atom of TsCl. The base serves to neutralize the hydrochloric acid (HCl) byproduct, driving the reaction to completion[10].

© 2026 BenchChem. All rights reserved.

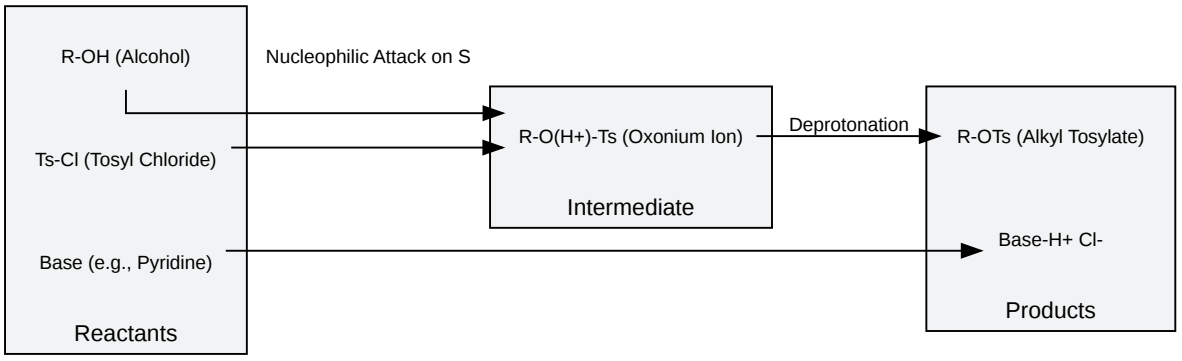

Figure 1: Mechanism of Alcohol Tosylation

Click to download full resolution via product page

Caption: Mechanism of alcohol tosylation with TsCl.

Core Principles of Nucleophilic Substitution on Tosylates

Alkyl tosylates are excellent substrates for nucleophilic substitution reactions, behaving much like alkyl halides[11]. The reaction predominantly proceeds via an S_N2 (bimolecular nucleophilic substitution) mechanism, especially for primary and secondary tosylates[5].

Key characteristics of the S_N2 reaction on tosylates include:

- Stereochemistry: The reaction proceeds with a complete inversion of stereochemistry at the electrophilic carbon center. This is a hallmark of the S_N2 mechanism, where the nucleophile attacks from the side opposite to the leaving group (backside attack)[11][12][13]. The overall process from alcohol to the final product results in a net inversion of configuration[11][12].
- Kinetics: The reaction rate is dependent on the concentration of both the alkyl tosylate and the nucleophile.
- Substrate: The reaction is fastest for primary tosylates and progressively slower for secondary tosylates due to increasing steric hindrance[12]. Tertiary tosylates typically do not

© 2026 BenchChem. All rights reserved.

undergo Sn2 reactions and will favor elimination (E2) or Sn1 pathways[2][12].

Caption: Sn2 reaction showing backside attack and inversion.

Reaction Conditions for Common Nucleophiles

The choice of reaction conditions—particularly the nucleophile, solvent, and temperature—is critical for achieving a successful substitution with high yield and minimal side products. Polar aprotic solvents such as DMF, DMSO, and acetone are generally preferred for Sn2 reactions as they solvate the counter-ion of the nucleophile but do not strongly solvate the nucleophile itself, thus preserving its reactivity[14][15].

Table 1: Typical Conditions for Nucleophilic Substitution of Alkyl Tosylates

Substrate Type	Nucleophile (Reagent)	Solvent	Temperature (°C)	Time (h)	Typical Yield (%)	Reference(s)
Primary Tosylate	Azide (NaN_3)	DMF	60 - 80	3 - 6	90	[5][14]
Secondary Tosylate	Bromide (NaBr)	Acetone	50	12	85	[5]
Primary Tosylate	Cyanide (NaCN)	DMSO	80	6	82	[5]
Secondary Tosylate	Methoxide (NaOMe)	Methanol	25	24	75	[5]
Primary Tosylate	Amine ($R-NH_2$) (excess)	Toluene	Reflux	3 - 4	Variable	[16]
Secondary Tosylate	Acetate (NaOAc)	DMF	80 - 100	12 - 24	70 - 85	

Detailed Experimental Protocols

© 2026 BenchChem. All rights reserved.

The following protocols provide step-by-step methodologies for the tosylation of a primary alcohol and a subsequent nucleophilic substitution with sodium azide.

Protocol 1: General Procedure for the Tosylation of a Primary Alcohol

This protocol describes the reliable conversion of a primary alcohol into its corresponding tosylate, preparing it for subsequent substitution reactions[5][17].

Materials:

- Primary alcohol (1.0 eq.)
- p-Toluenesulfonyl chloride (TsCl) (1.2 eq.)
- Anhydrous pyridine or triethylamine (1.5 eq.)
- Anhydrous dichloromethane (DCM) (10 volumes)
- Deionized water
- 1 M HCl solution
- Saturated sodium bicarbonate solution
- Brine (saturated NaCl solution)
- Anhydrous sodium sulfate (Na_2SO_4) or magnesium sulfate ($MgSO_4$)

Procedure:

- In a flame-dried round-bottom flask under an inert atmosphere (e.g., nitrogen or argon), dissolve the primary alcohol (1.0 eq.) in anhydrous DCM (10 volumes).
- Cool the solution to 0 °C using an ice-water bath.
- Slowly add anhydrous pyridine (1.5 eq.) to the stirred solution.

© 2026 BenchChem. All rights reserved.

- Add p-toluenesulfonyl chloride (1.2 eq.) portion-wise, ensuring the internal temperature remains below 5 °C.
- Stir the reaction mixture at 0 °C for 30 minutes, then allow it to warm to room temperature and stir for an additional 2-6 hours[5].
- Monitor the reaction progress by Thin Layer Chromatography (TLC) until the starting alcohol is consumed.
- Upon completion, carefully quench the reaction by adding cold deionized water.
- Transfer the mixture to a separatory funnel. Wash the organic layer sequentially with cold 1 M HCl (to remove pyridine), deionized water, saturated sodium bicarbonate solution, and finally brine.
- Dry the organic layer over anhydrous Na_2SO_4, filter, and concentrate the solvent under reduced pressure using a rotary evaporator.
- The crude tosylate can be purified by recrystallization (e.g., from ethanol or hexanes) or by column chromatography on silica gel.

Protocol 2: S_N2 Substitution of an Alkyl Tosylate with Sodium Azide

This protocol details the displacement of a tosylate group with an azide nucleophile, a common transformation for introducing a nitrogen-containing functional group[5][18].

Materials:

- Alkyl tosylate (1.0 eq.)
- Sodium azide (NaN_3) (1.5 eq.)
- Anhydrous dimethylformamide (DMF)
- Deionized water
- Diethyl ether

© 2026 BenchChem. All rights reserved.

- Anhydrous magnesium sulfate ($MgSO_4$)

Procedure:

- In a round-bottom flask, dissolve the alkyl tosylate (1.0 eq.) in anhydrous DMF (5-10 volumes).
- Add sodium azide (1.5 eq.) to the solution. Caution: Sodium azide is highly toxic. Handle with appropriate personal protective equipment.
- Heat the reaction mixture to 60-80 °C in an oil bath and stir vigorously for 3-6 hours[5].
- Monitor the reaction progress by TLC.
- After completion, cool the reaction mixture to room temperature and pour it into a separatory funnel containing deionized water (approx. 10 volumes).
- Extract the aqueous layer three times with diethyl ether.
- Combine the organic extracts and wash them with brine to remove residual DMF.
- Dry the organic layer over anhydrous $MgSO_4$, filter, and carefully concentrate the solvent under reduced pressure. Caution: Low molecular weight organic azides can be explosive. Do not heat excessively or distill to dryness.
- Purify the crude product by column chromatography if necessary.

© 2026 BenchChem. All rights reserved.

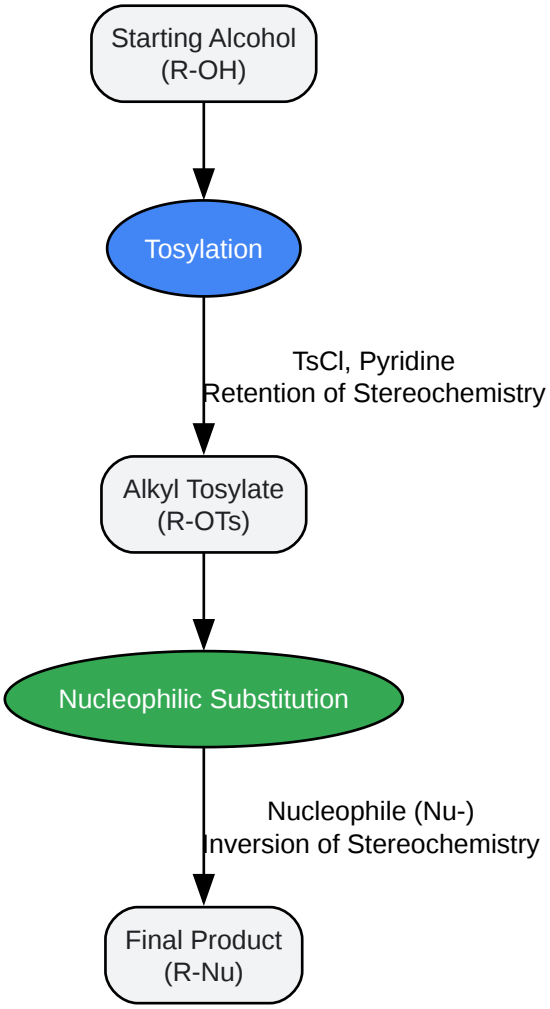

Figure 3: General Synthetic Workflow

Click to download full resolution via product page

Caption: Workflow from alcohol to substituted product.

Side Reactions and Troubleshooting

The primary competing reaction in the nucleophilic substitution of tosylates is E2 (bimolecular elimination). This is particularly prevalent under the following conditions:

- Substrate: Secondary and tertiary tosylates are more prone to elimination than primary tosylates[12].
- Nucleophile/Base: Strong, sterically hindered bases (e.g., potassium tert-butoxide, t-BuOK) strongly favor elimination over substitution[13][19].

© 2026 BenchChem. All rights reserved.

- Temperature: Higher reaction temperatures generally favor elimination over substitution because elimination has a higher activation energy and benefits more from increased thermal energy[19].

To favor substitution over elimination, it is advisable to use a strong, non-bulky nucleophile, the least sterically hindered substrate possible, a polar aprotic solvent, and the lowest effective reaction temperature[12][19].

Conclusion

The conversion of alcohols to tosylates is an indispensable strategy in organic synthesis, transforming a poor leaving group into an excellent one. This activation enables a wide range of S_n2 reactions with a high degree of predictability and stereochemical control. By carefully selecting the substrate, nucleophile, solvent, and temperature, researchers can effectively utilize alkyl tosylates to construct complex molecular architectures, making this methodology a vital tool for professionals in drug discovery and chemical development.

References

Need Custom Synthesis?

BenchChem offers custom synthesis for rare earth carbides and specific isotopiclabeling.

Email: info@benchchem.com or Request Quote Online.

Sources

- 1. masterorganicchemistry.com [masterorganicchemistry.com]
- 2. Mesylates and Tosylates with Practice Problems - Chemistry Steps [chemistrysteps.com]
- 3. chem.libretexts.org [chem.libretexts.org]
- 4. 7.6 Extra Topics on Nucleophilic Substitution Reactions – Organic Chemistry I [kpu.pressbooks.pub]
- 5. benchchem.com [benchchem.com]
- 6. chem.libretexts.org [chem.libretexts.org]
- 7. Why is the tosylate anion a good leaving group class 12 chemistry CBSE [vedantu.com]

- 8. aliphatic nucleophilic substitution [employees.csbsju.edu]
- 9. Treatment of Alcohols with Tosyl Chloride Does Not always Lead to the Formation of Tosylates - PMC [pmc.ncbi.nlm.nih.gov]
- 10. benchchem.com [benchchem.com]
- 11. chem.libretexts.org [chem.libretexts.org]
- 12. orgosolver.com [orgosolver.com]
- 13. m.youtube.com [m.youtube.com]
- 14. benchchem.com [benchchem.com]
- 15. The Role of Solvent in SN1, SN2, E1 and E2 Reactions - Chemistry Steps [chemistrysteps.com]
- 16. researchgate.net [researchgate.net]
- 17. organic-synthesis.com [organic-synthesis.com]
- 18. researchgate.net [researchgate.net]
- 19. masterorganicchemistry.com [masterorganicchemistry.com]

- To cite this document: BenchChem. [Introduction: The Strategic Role of the Tosyl Group in Modern Synthesis]. BenchChem, [2026]. [Online PDF]. Available at: [https://www.benchchem.com/product/b15542799/docs#introduction-the-strategic-role-of-the-tosyl-group-in-modern-synthesis]

Disclaimer & Data Validity:

The information provided in this document is for Research Use Only (RUO) and is strictly not intended for diagnostic or therapeutic procedures. While BenchChem strives to provide accurate protocols, we make no warranties, express or implied, regarding the fitness of this product for every specific experimental setup.

Technical Support: The protocols provided are for reference purposes. Unsure if this reagent suits your experiment?

Need Industrial/Bulk Grade? Request Custom Synthesis Quote

BenchChem

Our mission is to be the trusted global source of essential and advanced chemicals, empowering scientists and researchers to drive progress in science and industry.

Contact

Address: 3281 E Guasti Rd

Ontario, CA 91761, United States

Phone: (601) 213-4426

Email: info@benchchem.com

Contact our Ph.D. Support Team for a compatibility check

© 2026 BenchChem. All rights reserved.