Adjusting IHMT-PI3K-455 dosage for different tumor models

Author: BenchChem Technical Support Team. **Date**: April 2026

Compound of Interest

Compound Name:	*IHMT-PI3K-455*
Cat. No.:	*B15541784*

Get Quote

Technical Support Center: IHMT-PI3K-455

Welcome to the technical support center for **IHMT-PI3K-455**. This resource is designed to assist researchers, scientists, and drug development professionals in effectively utilizing this potent and selective PI3Kγ/δ dual inhibitor in preclinical tumor models. Here you will find troubleshooting guides, frequently asked questions (FAQs), detailed experimental protocols, and key data summaries to support your research endeavors.

Troubleshooting Guide

This guide addresses specific issues that may arise during your experiments with **IHMT-PI3K-455**.

© 2026 BenchChem. All rights reserved.

Question/Issue	Potential Cause	Recommended Solution
Inconsistent results in cell viability assays.	1. Cell line instability or high passage number.2. Inconsistent inhibitor concentration due to improper storage or dilution.3. Edge effects in multi-well plates.	1. Use low-passage cells and regularly perform cell line authentication.2. Prepare fresh dilutions of IHMT-PI3K-455 from a validated stock for each experiment. Store the stock solution as recommended on the datasheet.3. Avoid using the outer wells of the plate; fill them with sterile media or PBS to maintain humidity.
High background or weak signal in Western blots for p-AKT.	1. Ineffective primary antibody or suboptimal antibody dilution.2. Insufficient blocking of the membrane.3. Low basal p-AKT levels in the chosen cell line.	1. Use a validated antibody for p-AKT and optimize the dilution.2. Increase the blocking time or try a different blocking agent (e.g., BSA instead of non-fat dry milk).3. Consider stimulating cells with a growth factor (e.g., C5a for RAW264.7 cells or anti-IgM for Raji cells) after serum starvation to induce a robust p-AKT signal.[1]
Suboptimal tumor growth inhibition in vivo.	1. Insufficient dosage for the specific tumor model.2. Poor bioavailability or rapid metabolism of the compound in the selected animal model.3. Tumor model intrinsically resistant to PI3Kγ/δ inhibition.	1. Perform a dose-response study to determine the optimal dose for your specific tumor model. Start with the published effective dose of 40 mg/kg once daily in the MC38 model as a reference.[1]2. Review the pharmacokinetic data of IHMT-PI3K-455. If not available, consider performing a pilot pharmacokinetic study.3. Analyze the

© 2026 BenchChem. All rights reserved.

		expression levels of PI3Kγ and PI3Kδ in your tumor model. Models with low or absent expression may not respond.
Unexpected off-target effects or toxicity in vivo.	1. High dosage leading to inhibition of other kinases.2. On-target toxicities related to the inhibition of PI3Kγ/δ in normal tissues.	1. Review the selectivity profile of IHMT-PI3K-455. If high concentrations are being used, consider reducing the dose.2. Monitor animals closely for common PI3K inhibitor-related toxicities such as hyperglycemia, diarrhea, and rash. Consider intermittent dosing schedules to potentially mitigate toxicity while maintaining efficacy.[2]

Frequently Asked Questions (FAQs)

Q1: What is the recommended starting dose for **IHMT-PI3K-455** in a new in vivo tumor model?

A single in vivo study has reported significant tumor growth inhibition in a MC38 colon adenocarcinoma xenograft model at a dosage of 40 mg/kg, administered orally once daily for 30 days.[1] For a new tumor model, it is advisable to perform a pilot dose-escalation study starting from a lower dose and escalating to a maximum tolerated dose (MTD) or until the desired therapeutic effect is achieved. As a reference, preclinical studies with the dual PI3K-δ/γ inhibitor duvelisib (IPI-145) have utilized doses ranging from 10 mg/kg to 50 mg/kg in various hematologic malignancy xenograft models.[3]

Q2: Which tumor models are most likely to respond to IHMT-PI3K-455?

IHMT-PI3K-455 is a dual inhibitor of PI3Kγ and PI3Kδ. These isoforms are predominantly expressed in hematopoietic cells. Therefore, tumor models of hematological malignancies such as lymphomas and leukemias are predicted to be sensitive. The reported efficacy in the MC38

© 2026 BenchChem. All rights reserved.

colon cancer model suggests that solid tumors with significant immune cell infiltration may also respond, as the drug can modulate the tumor microenvironment by targeting immune cells. Specifically, **IHMT-PI3K-455** has been shown to repolarize M2 macrophages towards a pro-inflammatory M1 phenotype and increase the number of tumor-infiltrating CD8+ T cells.

Q3: How can I confirm that IHMT-PI3K-455 is hitting its target in my model?

Target engagement can be confirmed by assessing the phosphorylation status of downstream effectors of the PI3K pathway. A common method is to perform a Western blot for phosphorylated AKT (p-AKT) on protein lysates from treated cells or tumor tissue. **IHMT-PI3K-455** has been shown to potently inhibit AKT phosphorylation in RAW264.7 and Raji cells. For in vivo studies, tumor samples can be collected at various time points after dosing to assess the level and duration of p-AKT inhibition.

Q4: What are the known IC50 values for IHMT-PI3K-455 against different PI3K isoforms?

The reported IC50 values for **IHMT-PI3K-455** are:

- PI3Kγ: 7.1 nM
- PI3Kδ: 0.57 nM
- PI3Kα: 6.717 µM
- PI3Kβ: 42.04 nM

These values demonstrate the high potency and selectivity of **IHMT-PI3K-455** for the γ and δ isoforms over the α and β isoforms.

Data Summary Tables

Table 1: In Vitro Activity of **IHMT-PI3K-455**

© 2026 BenchChem. All rights reserved.

Cell Line	Assay	Concentration	Incubation Time	Observed Effect	Reference
RAW264.7	AKT Phosphorylation	0.01-1 µM	2 hours	Potent inhibition of C5a-stimulated p-AKT (IC50 = 0.015 µM)	
Raji	AKT Phosphorylation	0.01-1 µM	2 hours	Potent inhibition of anti-IgM-stimulated p-AKT (IC50 = 0.010 µM)	
THP-1 & BMDM derived M2 Macrophages	Macrophage Polarization	0.1, 1 µM	72 hours	Dose-dependent repolarization of M2 macrophages towards an M1 phenotype.	

Table 2: In Vivo Efficacy of **IHMT-PI3K-455** and a Structurally Related Inhibitor (Duvelisib)

Disclaimer: The data for Duvelisib is provided for comparative purposes as it shares a similar mechanism of action. However, direct extrapolation of dosage and efficacy for **IHMT-PI3K-455** should be done with caution.

© 2026 BenchChem. All rights reserved.

Compound	Tumor Model	Animal Model	Dosing Regimen	Outcome	Reference
IHMT-PI3K-455	MC38 (Colon Adenocarcinoma)	Xenograft	40 mg/kg, p.o., once daily for 30 days	Significant inhibition of tumor growth; increased tumor-infiltrating CD8+ T cells.	
Duvelisib (IPI-145)	T-cell Lymphoma (AITL)	PDX	10 mg/kg, p.o., daily for 7 days	Shift in tumor-associated macrophages from M2 to M1 phenotype.	
Duvelisib (IPI-145)	Mantle Cell Lymphoma (Maver-1, Mino)	Xenograft	50 mg/kg	Reduction in tumor volume.	
Duvelisib (IPI-145)	Pediatric Acute Lymphoblastic Leukemia	PDX	50 mg/kg, p.o., twice daily for 28 days	Limited in vivo activity with only one objective response in a panel of PDXs.	

Experimental Protocols

Protocol 1: In Vitro Cell Viability Assay

- Cell Seeding: Seed cancer cells in a 96-well plate at a density of 3,000-8,000 cells per well in complete growth medium. Allow cells to adhere overnight.

© 2026 BenchChem. All rights reserved.

- Compound Preparation: Prepare a 10 mM stock solution of **IHMT-PI3K-455** in DMSO. Create a serial dilution of the compound in complete growth medium to achieve the desired final concentrations.
- Treatment: Replace the medium in the wells with the medium containing the various concentrations of **IHMT-PI3K-455** or vehicle control (e.g., 0.1% DMSO).
- Incubation: Incubate the plate for 72 hours at 37°C in a humidified atmosphere with 5% CO2.
- Viability Assessment: Add a viability reagent (e.g., CellTiter-Glo®, MTT, or resazurin) to each well according to the manufacturer's instructions.
- Data Analysis: Measure the signal (luminescence or absorbance) using a plate reader. Normalize the data to the vehicle-treated control wells and plot the results to determine the IC50 value.

Protocol 2: Western Blot for p-AKT

- Cell Culture and Treatment: Seed cells in 6-well plates and grow to 70-80% confluency. Serum starve the cells overnight if necessary. Treat with various concentrations of **IHMT-PI3K-455** for the desired time (e.g., 2 hours).
- Cell Lysis: Wash the cells with ice-cold PBS and lyse them in RIPA buffer supplemented with protease and phosphatase inhibitors.
- Protein Quantification: Determine the protein concentration of each lysate using a BCA assay.
- SDS-PAGE and Transfer: Load equal amounts of protein (20-30 µg) onto an SDS-PAGE gel. After electrophoresis, transfer the proteins to a PVDF membrane.
- Blocking and Antibody Incubation: Block the membrane with 5% BSA or non-fat dry milk in TBST for 1 hour at room temperature. Incubate the membrane with primary antibodies against p-AKT (Ser473), total AKT, and a loading control (e.g., β-actin or GAPDH) overnight at 4°C.

© 2026 BenchChem. All rights reserved.

- Secondary Antibody and Detection: Wash the membrane with TBST and incubate with the appropriate HRP-conjugated secondary antibody for 1 hour at room temperature. Visualize the protein bands using an ECL substrate and an imaging system.
- Data Analysis: Quantify the band intensities using densitometry software. Normalize the p-AKT signal to the total AKT signal.

Visualizations

© 2026 BenchChem. All rights reserved.

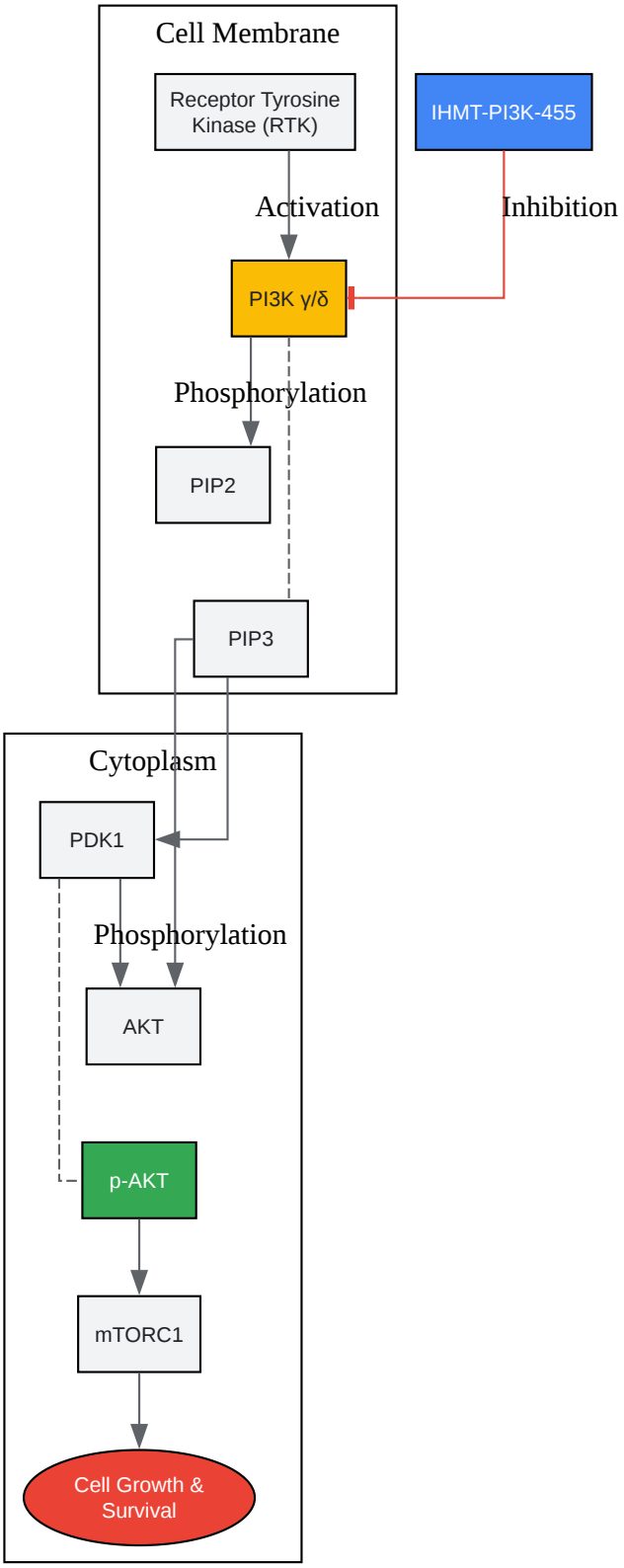

© 2026 BenchChem. All rights reserved.

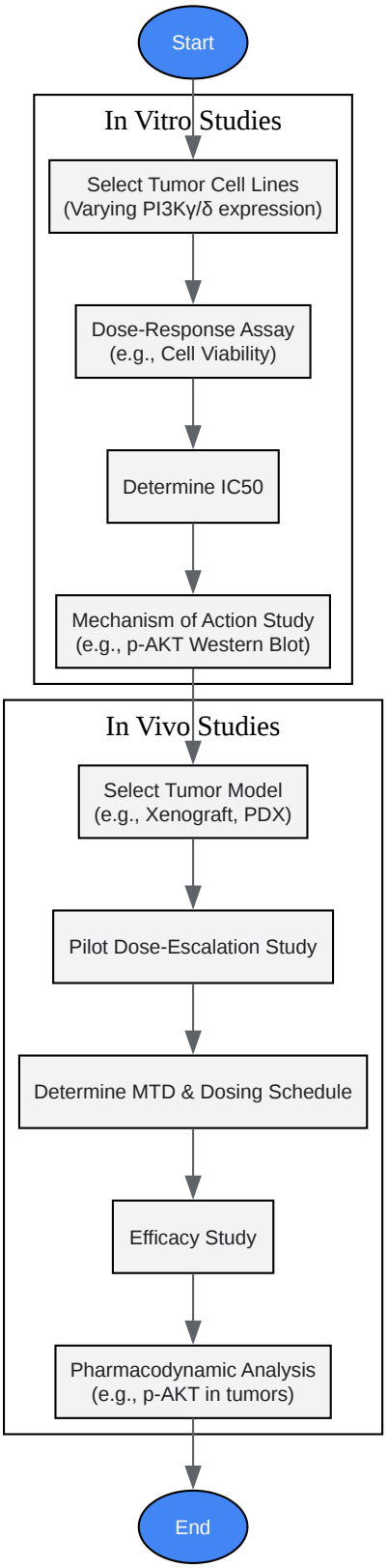

© 2026 BenchChem. All rights reserved.

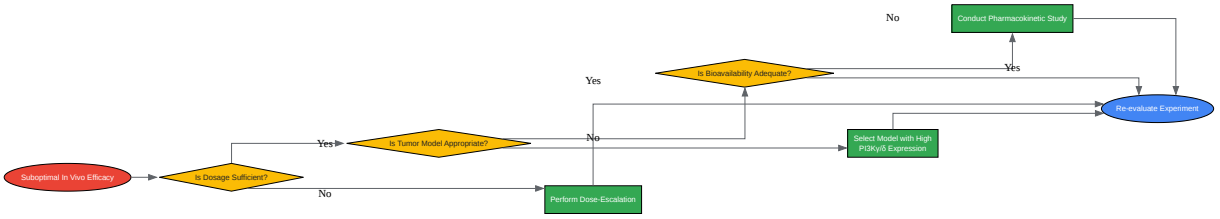

Click to download full resolution via product page

Need Custom Synthesis?

BenchChem offers custom synthesis for rare earth carbides and specific isotopiclabeling.

Email: info@benchchem.com or Request Quote Online.

References

- 1. ashpublications.org [ashpublications.org]
- 2. Activity of the PI3K-δ,γ inhibitor duvelisib in a phase 1 trial and preclinical models of T-cell lymphoma - PubMed [pubmed.ncbi.nlm.nih.gov]
- 3. ashpublications.org [ashpublications.org]
- To cite this document: BenchChem. [Adjusting IHMT-PI3K-455 dosage for different tumor models]. BenchChem, [2026]. [Online PDF]. Available at: [https://www.benchchem.com/product/b15541784/docs#adjusting-ihmt-pi3k-455-dosage-for-different-tumor-models]

Disclaimer & Data Validity:

The information provided in this document is for Research Use Only (RUO) and is strictly not intended for diagnostic or therapeutic procedures. While BenchChem strives to provide accurate protocols, we make no warranties, express or implied, regarding the fitness of this product for every specific experimental setup.

Technical Support: The protocols provided are for reference purposes. Unsure if this reagent suits your experiment?

Need Industrial/Bulk Grade? Request Custom Synthesis Quote

BenchChem

Our mission is to be the trusted global source of essential and advanced chemicals, empowering scientists and researchers to drive progress in science and industry.

Contact

Address: 3281 E Guasti Rd

Ontario, CA 91761, United States

Phone: (601) 213-4426

Email: info@benchchem.com

Contact our Ph.D. Support Team for a compatibility check

© 2026 BenchChem. All rights reserved.