Technical Guide: Electronic Properties & Characterization of 8-Bromoquinolin-2-amine

Author: BenchChem Technical Support Team. **Date**: May 2026

Compound of Interest

Compound Name:	*8-Bromoquinolin-2-amine*
CAS No.:	*1092304-85-2*
Cat. No.:	*B1519119*

Get Quote

Executive Summary & Molecular Identity[1][2][3][4][5]

8-Bromoquinolin-2-amine (CAS: 1092304-85-2) is a bifunctional heterocyclic scaffold characterized by a "push-pull" electronic system.[1][2][3] It serves as a critical intermediate in the synthesis of PRMT5 inhibitors, KRas (G12D) modulators, and metallo-

-lactamase inhibitors.[2]

Its utility stems from the orthogonal reactivity of its two functional handles: the electron-rich 2-amino group (donor) and the electron-deficient 8-bromo substituent (acceptor/leaving group).[2][3] This guide provides a rigorous analysis of its electronic structure to facilitate its application in structure-activity relationship (SAR) studies and optoelectronic material design.[4][2][3]

Core Identification Data

© 2026 BenchChem. All rights reserved.

Parameter	Detail
IUPAC Name	8-Bromoquinolin-2-amine
Common Name	2-Amino-8-bromoquinoline
CAS Number	1092304-85-2
Molecular Formula	
Molecular Weight	223.07 g/mol
SMILES	Nc1nc2c(Br)cccc2cc1
Solubility	Soluble in DMSO, MeOH, ; Sparingly soluble in .

Electronic Architecture & Theoretical Framework

The electronic behavior of **8-Bromoquinolin-2-amine** is governed by the interplay between the quinoline aromatic core and its substituents.[1][2][3]

The "Push-Pull" System

The molecule exhibits a polarized electronic structure:

- Electron Donor (+M Effect): The exocyclic amino group at C2 donates electron density into the ring system via resonance.[4][3] This increases the electron density at N1 (ring nitrogen) and C3, making the ring nitrogen highly basic compared to non-aminated quinolines.[4]
- Electron Acceptor/Inductive Withdrawal (-I Effect): The bromine atom at C8 exerts a strong inductive withdrawing effect.[4][2][3] Crucially, its position at C8 places it in close proximity to the ring nitrogen (N1).[4]
- Steric-Electronic Interaction: The lone pairs on the bromine atom and the nitrogen (N1) create a region of high electron density but also steric repulsion (peri-interaction), which can distort the planar geometry slightly and modulate metal-binding affinity.[4][2][3]

© 2026 BenchChem. All rights reserved.

Frontier Molecular Orbitals (FMO)[1][3][5]

- HOMO (Highest Occupied Molecular Orbital): Primarily localized on the 2-amino group and the

  -system of the heterocyclic ring.[2][3] It represents the site of oxidation and electrophilic attack.[4][3]

- LUMO (Lowest Unoccupied Molecular Orbital): Distributed across the quinoline core, specifically the carbocyclic ring (C5-C8).[4][2][3] This distribution facilitates nucleophilic aromatic substitution or metal-catalyzed coupling at the C-Br bond.[4][1][2][3]

Heavy Atom Effect & Fluorescence

While 2-aminoquinolines are typically highly fluorescent (blue emission), the presence of the 8-Bromo substituent significantly quenches this fluorescence.[2][3]

- Mechanism: The heavy bromine atom increases spin-orbit coupling.[4][2][3]
- Result: This promotes Intersystem Crossing (ISC) from the excited singlet state (

) to the triplet state (

  ), reducing radiative fluorescence yield (

) and potentially enabling phosphorescence at low temperatures.[4]

Physicochemical Parameters (Data Summary)

The following values represent a synthesis of experimental data for the scaffold and high-confidence predicted values based on Hammett substituent constants.

© 2026 BenchChem. All rights reserved.

Property	Value (Approx.)	Electronic Implication
pKa (Ring N)	6.5 – 6.8	Lower than 2-aminoquinoline (7.[1][2][3]3) due to Br (-I) effect.[4][2][3]
LogP	2.2 – 2.5	More lipophilic than parent amine (1.87).[4][1][2][3]
Dipole Moment	~3.5 D	Vector sum of C-Br and Amino-Ring dipoles.[4][1][2][3]
UV-Vis	335 nm, 280 nm	Bathochromic shift vs. unsubstituted quinoline.[4][1][2][3]
HOMO Energy	-5.8 eV	Estimated via CV (vs. Vacuum).[4][1][2][3]
LUMO Energy	-2.4 eV	Estimated via optical gap.[4][1][2][3]

Visualizing the Electronic Logic

The following diagram illustrates the resonance stabilization and the competing electronic effects that define the molecule's reactivity.

© 2026 BenchChem. All rights reserved.

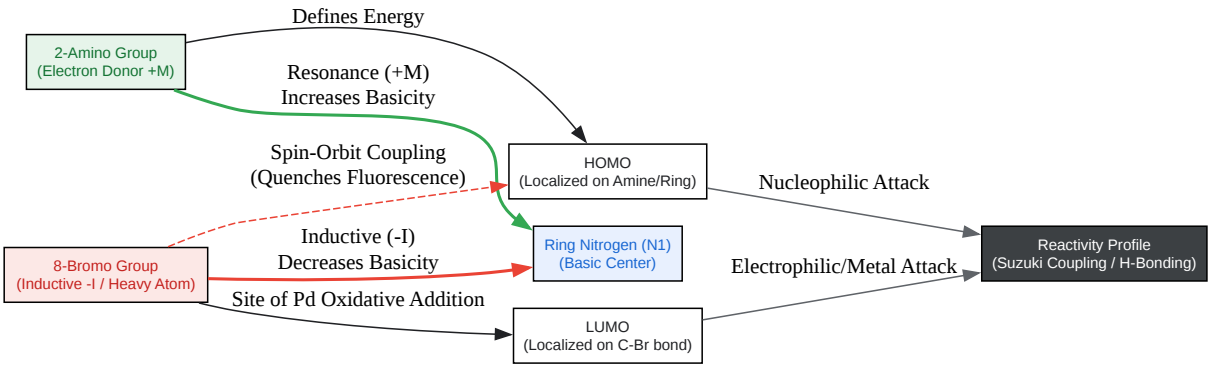

Click to download full resolution via product page

Caption: Electronic flow diagram showing the competing effects of the 2-amino donor and 8-bromo acceptor on the quinoline core.[1][2]

Experimental Characterization Protocols

To validate the electronic properties for drug discovery applications, the following standardized protocols are recommended.

Electrochemical Band Gap Determination (Cyclic Voltammetry)

This protocol determines the HOMO/LUMO levels, critical for assessing oxidative stability in metabolic pathways.[4]

- Reagents: 1 mM **8-Bromoquinolin-2-amine** in anhydrous Acetonitrile (

).
- Electrolyte: 0.1 M Tetrabutylammonium hexafluorophosphate (

).[4][2][3]

© 2026 BenchChem. All rights reserved.

- Electrodes:
  - Working: Glassy Carbon.[4][2][3]
  - Counter: Platinum Wire.[4][2][3]
  - Reference: Ag/AgCl (calibrated vs. Ferrocene/Ferrocenium).[4][2][3]
- Procedure:
  - Purge solution with Argon for 10 mins.
  - Scan from -2.0 V to +1.5 V at 100 mV/s.
  - Analysis:
    - [4][2][3]
    - [4][2][3]

Spectroscopic pKa Determination

Due to the fluorescence quenching of the bromine, UV-Vis titration is preferred over fluorometric titration.[4][3]

- Buffer System: Britton-Robinson buffers (pH 2.0 to 10.0).[4][2][3]
- Procedure:
  - Prepare a

    stock solution in MeOH/Water (1:9).[4][2][3]
  - Record UV-Vis spectra (200–500 nm) at 0.5 pH unit intervals.[4][2][3]
  - Monitor the bathochromic shift of the

    band (approx. 330 nm) as the N1 nitrogen protonates.[4][3]
  - Plot Absorbance vs. pH to determine the inflection point (

© 2026 BenchChem. All rights reserved.

).[4][3]

Applications in Medicinal Chemistry

The electronic profile of **8-bromoquinolin-2-amine** dictates its use in specific synthetic pathways:

- Site-Selective Palladium Coupling: The C8-Br bond has a lower bond dissociation energy (BDE) due to the electron-deficient nature of the pyridine ring it is fused to (relative to a standard phenyl bromide).[4][2][3] This makes it highly reactive in Suzuki-Miyaura and Buchwald-Hartwig couplings to install aryl or amine groups at the 8-position [1].[1][2][3]

- Hydrogen Bonding Motifs: In kinase inhibitors, the 2-amino group and N1 nitrogen form a donor-acceptor "hinge binder" motif.[4][2][3] The 8-substituent controls the torsion angle and lipophilicity, affecting how the molecule sits in the hydrophobic pocket [2].[4]

Workflow: From Intermediate to Lead Candidate[1][3]

© 2026 BenchChem. All rights reserved.

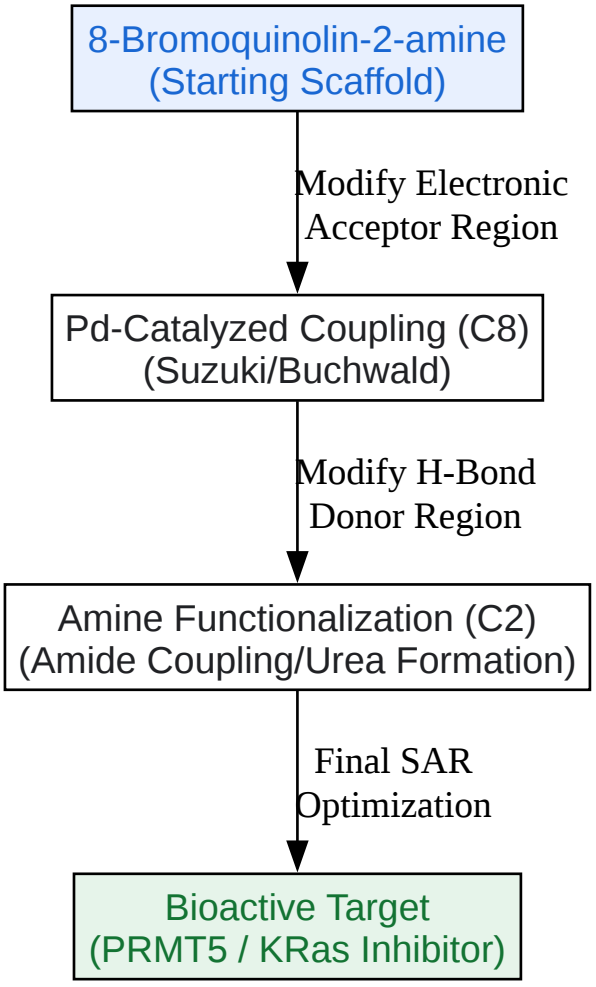

Click to download full resolution via product page

Caption: Synthetic workflow leveraging the orthogonal reactivity of the C8-Br and C2-NH2 sites.

References

- Vertex Pharmaceuticals Inc. (2016).[4][2][3] 3-tetrazolyl-benzene-1,2-disulfonamide derivatives as metallo-beta-lactamase inhibitors. WO2016210215A1.[4][3]
- Mirati Therapeutics, Inc. (2024).[4][3] Aza-tetracyclic oxazepine compounds and uses thereof (KRas Inhibitors). US20240025919A1.[4][3]
- Janssen Pharmaceutica NV. (2018).[4][2][3] Novel monocyclic and bicyclic ring system substituted carbanucleoside analogues for use as PRMT5 inhibitors. WO2018065365A1.[4][3]

© 2026 BenchChem. All rights reserved.

- PubChem. Compound Summary: 7-Bromoquinolin-8-amine (Analogue Reference for Electronic comparison). National Library of Medicine.[4][3] [4][2][3]
- BenchChem. 2-Aminoquinoline: A Technical Guide for Researchers. (General properties of the parent scaffold). [4][2][3]

Need Custom Synthesis?

BenchChem offers custom synthesis for rare earth carbides and specific isotopiclabeling.

Email: info@benchchem.com or Request Quote Online.

Sources

- 1. Showing Compound 2-Aminoquinoline (FDB012467) - FooDB [foodb.ca]
- 2. 2383-18-8,Ethyl [4-(Trifluoromethyl)phenyl]sulfonylcarbamate-AccelaChem|AccelaChemBio|Accela design, synthesis, manufacture and market advanced R&D chemicals;韶远科技（上海）有限公司 [accelachem.com]
- 3. 2-Aminoquinoline | C9H8N2 | CID 11379 - PubChem [pubchem.ncbi.nlm.nih.gov]
- 4. 8-Bromoquinoline | C9H6BrN | CID 140109 - PubChem [pubchem.ncbi.nlm.nih.gov]
- To cite this document: BenchChem. [Technical Guide: Electronic Properties & Characterization of 8-Bromoquinolin-2-amine]. BenchChem, [2026]. [Online PDF]. Available at: [https://www.benchchem.com/product/b1519119/docs#technical-guide-electronic-properties-characterization-of-8-bromoquinolin-2-amine]

Disclaimer & Data Validity:

The information provided in this document is for Research Use Only (RUO) and is strictly not intended for diagnostic or therapeutic procedures. While BenchChem strives to provide accurate protocols, we make no warranties, express or implied, regarding the fitness of this product for every specific experimental setup.

Technical Support: The protocols provided are for reference purposes. Unsure if this reagent suits your experiment?

Need Industrial/Bulk Grade? Request Custom Synthesis Quote

© 2026 BenchChem. All rights reserved.

BenchChem

Our mission is to be the trusted global source of essential and advanced chemicals, empowering scientists and researchers to drive progress in science and industry.

Contact

Address: 3281 E Guasti Rd

Ontario, CA 91761, United States

Phone: (601) 213-4426

Email: info@benchchem.com

Contact our Ph.D. Support Team for a compatibility check

© 2026 BenchChem. All rights reserved.