Application Notes and Protocols for Bioassay Methods of Imidacloprid

Author: BenchChem Technical Support Team. **Date**: April 2026

Compound of Interest

Compound Name:	*Insecticidal agent 1*
Cat. No.:	*B15143293*

Get Quote

Introduction

Imidacloprid is a systemic neonicotinoid insecticide widely utilized for the control of a broad spectrum of sucking and certain chewing insects.[1][2] Its efficacy stems from its action on the central nervous system of insects, where it blocks nicotinic acetylcholine receptors, leading to paralysis and death.[1][3][4] The evaluation of Imidacloprid's insecticidal activity and the monitoring of resistance development in pest populations necessitate standardized bioassay procedures. These application notes provide detailed protocols for researchers, scientists, and professionals in drug development to assess the biological performance of Imidacloprid against various insect pests. The described methods include contact, oral, and systemic exposure bioassays.

Data Presentation

The following tables summarize the lethal concentration (LC50) and lethal dose (LD50) values of Imidacloprid for various insect species, as determined by different bioassay methods. These values are crucial for comparing the susceptibility of different pest populations and for monitoring resistance.

Table 1: Lethal Concentration (LC50) of Imidacloprid for Various Insect Species

© 2026 BenchChem. All rights reserved.

Insect Species	Bioassay Method	LC50 Value	Exposure Time	Reference
Aphis pomi (Green Apple Aphid)	Leaf Disk	0.054 ppm (2nd Instars)	3 days	
Aphis pomi (Green Apple Aphid)	Leaf Disk	0.165 ppm (Adults)	3 days	
Aphis pomi (Green Apple Aphid)	Adult Dip	1.19 ppm	3 days	
Bemisia tabaci (Whitefly)	Foliar Leaf-Dip	17 - 880 µg/ml	Not Specified	
Bemisia tabaci (Whitefly)	Systemic Root Drench	0.318 µg/ml	24 hours	
Aphis craccivora (Cowpea Aphid)	Leaf-Dip	0.11 ml/L	Not Specified	
Hyposidra talaca (Black Inch Looper)	Diet Incorporation	2.62 mg/l	48 hours	

Table 2: Lethal Dose (LD50) of Imidacloprid for Various Insect Species

Insect Species	Bioassay Method	LD50 Value	Exposure Time	Reference
Thrips palmi (Melon Thrips)	Residual Contact Vial	Not Specified	8 hours	
Musca domestica (House Fly)	Topical Application	51.91 ng/fly (Susceptible Strain)	48 hours	

© 2026 BenchChem. All rights reserved.

Experimental Protocols

Detailed methodologies for key bioassay experiments are provided below. These protocols are designed to be followed in a laboratory setting to ensure reproducibility and accuracy of results.

Contact Vial Bioassay (Residual Method)

This method assesses the toxicity of an insecticide when an insect comes into contact with a treated surface.

Objective: To determine the concentration of Imidacloprid that causes mortality to a target insect population upon contact with a treated surface.

Materials:

- Technical grade Imidacloprid
- Acetone (analytical grade)
- Glass scintillation vials (20 ml) with screw caps
- Repeating pipettor
- Vortex mixer
- Fume hood
- Target insects
- Camel hairbrush for transferring insects
- Incubator or controlled environment chamber

Protocol:

- Preparation of Test Solutions:
  - Prepare a stock solution of Imidacloprid in acetone. The concentration will depend on the expected susceptibility of the target insect.

© 2026 BenchChem. All rights reserved.

- Perform serial dilutions of the stock solution with acetone to obtain a range of 5-7 test concentrations.
- Include an acetone-only control.

- Coating the Vials:
  - Pipette 0.5 ml of each test solution (and the control) into separate glass vials.
  - Rotate the vials on their side on a hot dog roller or manually to ensure an even coating of the inner surface as the acetone evaporates. This should be done in a fume hood.
  - Allow the vials to dry completely, leaving a thin film of the insecticide.
- Insect Exposure:
  - Introduce a known number of insects (e.g., 10-20) into each vial using a camel hairbrush.
  - For small insects like whiteflies or thrips, up to 30 individuals per vial may be used.
  - Secure the caps on the vials. The caps should be loose enough to allow for air circulation but prevent escape.
- Incubation and Observation:
  - Place the vials in an upright position in an incubator or a room with controlled temperature and humidity.
  - Record mortality at predetermined time intervals (e.g., 4, 8, 12, 24, 48, and 72 hours). An insect is considered dead if it is unable to move when gently prodded with a fine brush.
- Data Analysis:
  - Correct for control mortality using Abbott's formula if mortality in the control group is between 5% and 20%.
  - Analyze the mortality data using probit analysis to determine the LC50 and LC90 values.

© 2026 BenchChem. All rights reserved.

Leaf-Dip Bioassay

This method is suitable for phytophagous (plant-feeding) insects, such as aphids and spider mites, and evaluates toxicity through both contact and ingestion of the treated leaf material.

Objective: To determine the lethal concentration of Imidacloprid for a target insect when exposed to treated leaves.

Materials:

- Imidacloprid formulation or technical grade dissolved in an appropriate solvent with a surfactant.
- Host plant leaves (e.g., cotton, cabbage, bean)
- Petri dishes
- Agar or filter paper
- Target insects
- Forceps
- Distilled water
- Surfactant (e.g., Triton X-100)

Protocol:

- Preparation of Test Solutions:
  - Prepare a stock solution of Imidacloprid in distilled water with a small amount of surfactant to ensure even wetting of the leaf surface.
  - Create a series of 5-7 dilutions from the stock solution.
  - Prepare a control solution containing only distilled water and the surfactant.
- Leaf Treatment:

© 2026 BenchChem. All rights reserved.

- Excise fresh, undamaged leaves from the host plant.
- Dip each leaf into a test solution for a standardized time (e.g., 10-30 seconds).
- Allow the leaves to air dry completely on a clean, non-absorbent surface.

- Insect Exposure:
  - Place the treated, dry leaves into Petri dishes. The bottom of the Petri dish can be lined with moist filter paper or a thin layer of agar to maintain leaf turgidity.
  - Transfer a known number of insects onto each treated leaf.
- Incubation and Observation:
  - Seal the Petri dishes with parafilm or a ventilated lid.
  - Maintain the dishes in a controlled environment.
  - Assess mortality at regular intervals (e.g., 24, 48, 72 hours).
- Data Analysis:
  - Correct for control mortality using Abbott's formula.
  - Use probit analysis to calculate the LC50 and other relevant toxicity parameters.

Diet Incorporation Bioassay

This method is used for insects that can be reared on an artificial diet, such as many lepidopteran larvae (caterpillars), and assesses toxicity primarily through ingestion.

Objective: To determine the lethal concentration of Imidacloprid when incorporated into the diet of a target insect.

Materials:

- Imidacloprid

© 2026 BenchChem. All rights reserved.

- Artificial diet ingredients for the target insect
- Multi-well bioassay trays or small containers
- Target insects (neonate larvae are often used)
- Blender or homogenizer

Protocol:

- Preparation of Treated Diet:
  - Prepare the artificial diet according to a standard recipe for the target insect species.
  - While the diet is still liquid and has cooled to a point where the insecticide will not degrade, add the appropriate volume of a known concentration of Imidacloprid solution.
  - Thoroughly mix the diet to ensure a homogenous distribution of the insecticide.
  - Prepare a control diet with the solvent only.
- Dispensing the Diet:
  - Dispense a consistent volume of the treated diet into each well of a bioassay tray or into individual rearing containers.
  - Allow the diet to solidify.
- Insect Infestation:
  - Place one or a small number of insects into each well or container.
- Incubation and Observation:
  - Cover the trays or containers to prevent insects from escaping and to maintain humidity.
  - Incubate under controlled conditions.

© 2026 BenchChem. All rights reserved.

- Record mortality and any sublethal effects (e.g., growth inhibition) after a set period (e.g., 7 days).

- Data Analysis:
  - Calculate the percentage of mortality for each concentration, correcting for control mortality.
  - Determine the LC50 value through probit analysis.

Mandatory Visualizations

Signaling Pathway of Imidacloprid

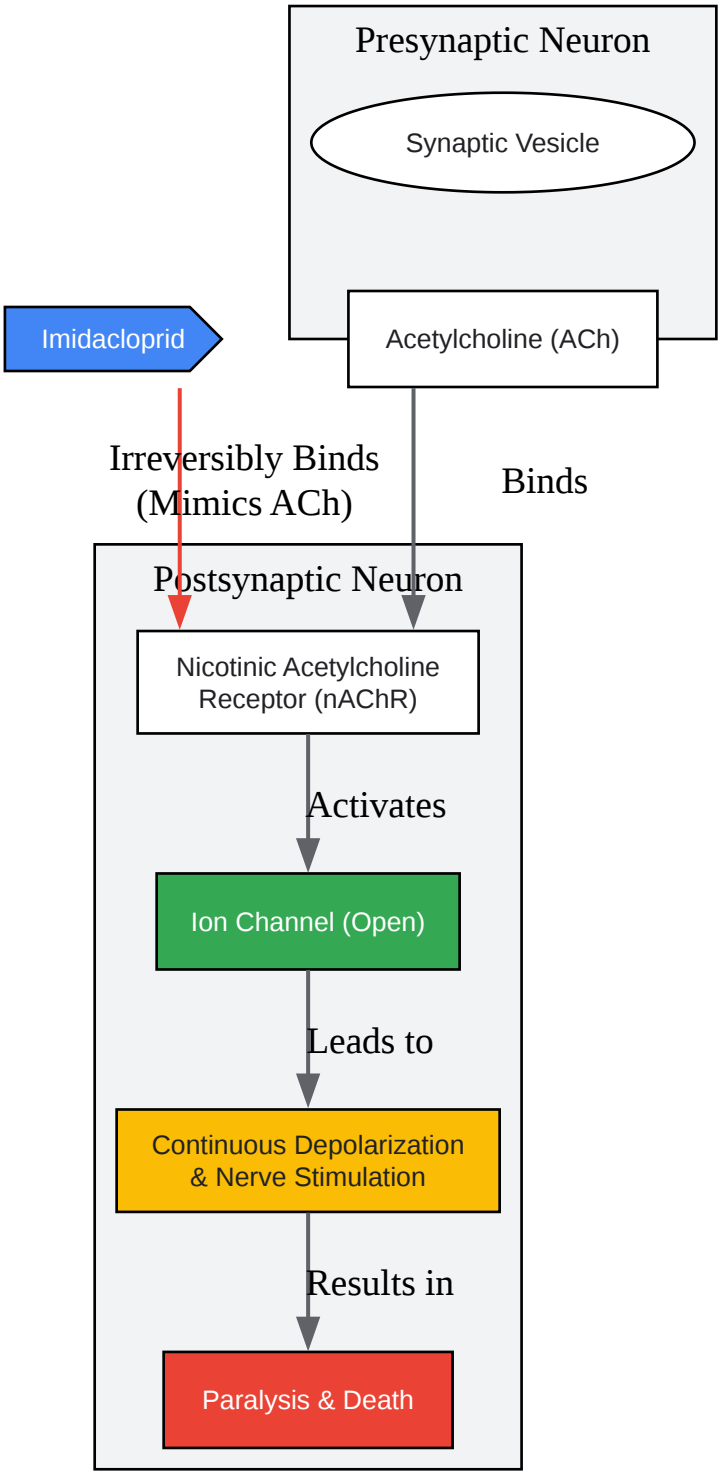

Click to download full resolution via product page

Caption: Mode of action of Imidacloprid on the insect nervous system.

© 2026 BenchChem. All rights reserved.

Experimental Workflow for Contact Vial Bioassay

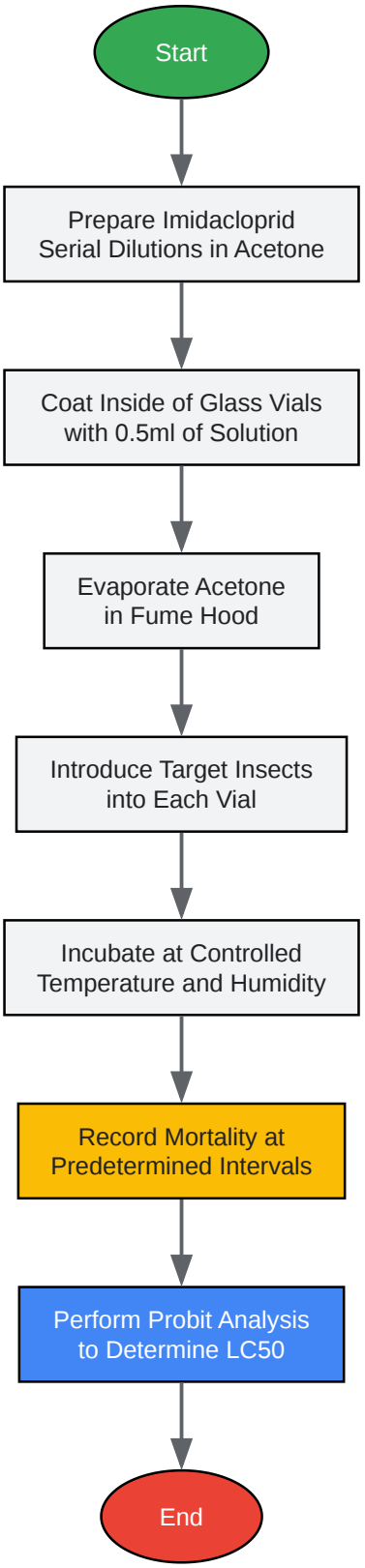

Click to download full resolution via product page

© 2026 BenchChem. All rights reserved.

Caption: Workflow for the contact vial bioassay.

Logical Relationship of Bioassay Types

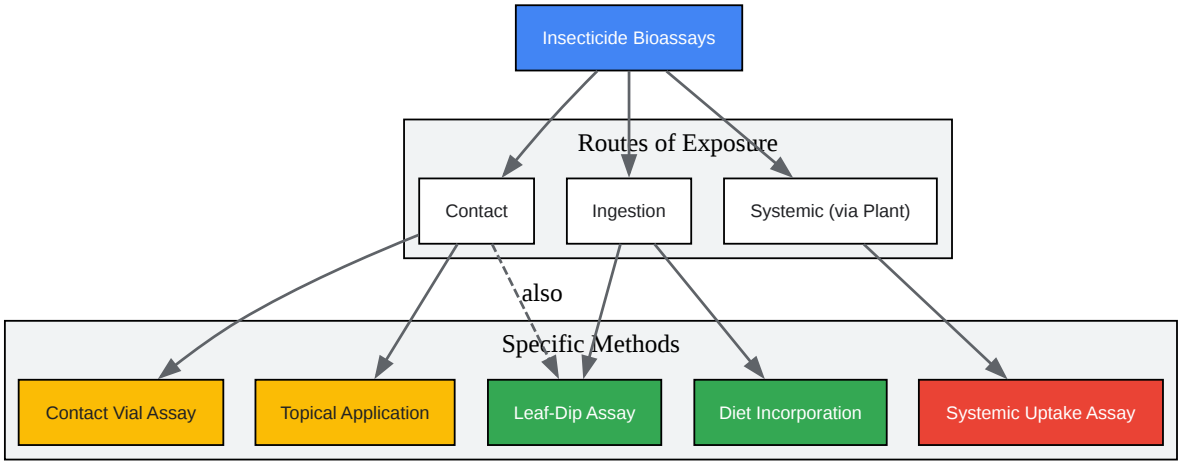

Click to download full resolution via product page

Caption: Classification of common insecticide bioassay methods.

Need Custom Synthesis?

BenchChem offers custom synthesis for rare earth carbides and specific isotopiclabeling.

Email: info@benchchem.com or Request Quote Online.

References

- 1. Imidacloprid - Wikipedia [en.wikipedia.org]
- 2. Imidacloprid General Fact Sheet [npic.orst.edu]
- 3. How Does Imidacloprid Work [laikebiotech.com]
- 4. Imidacloprid Technical Fact Sheet [npic.orst.edu]

- To cite this document: BenchChem. [Application Notes and Protocols for Bioassay Methods of Imidacloprid]. BenchChem, [2026]. [Online PDF]. Available at: [https://www.benchchem.com/product/b15143293/docs#application-notes-and-protocols-for-bioassay-methods-of-imidacloprid]

Disclaimer & Data Validity:

The information provided in this document is for Research Use Only (RUO) and is strictly not intended for diagnostic or therapeutic procedures. While BenchChem strives to provide accurate protocols, we make no warranties, express or implied, regarding the fitness of this product for every specific experimental setup.

Technical Support: The protocols provided are for reference purposes. Unsure if this reagent suits your experiment?

Need Industrial/Bulk Grade? Request Custom Synthesis Quote

BenchChem

Our mission is to be the trusted global source of essential and advanced chemicals, empowering scientists and researchers to drive progress in science and industry.

Contact

Address: 3281 E Guasti Rd

Ontario, CA 91761, United States

Phone: (601) 213-4426

Email: info@benchchem.com

Contact our Ph.D. Support Team for a compatibility check