Technical Support Center: Optimizing Treatment Duration with KRAS G12C Inhibitor 32

Author: BenchChem Technical Support Team. **Date**: April 2026

Compound of Interest

Compound Name: *KRAS G12C inhibitor 32*

Cat. No.: *B15141959*

Get Quote

This technical support center provides researchers, scientists, and drug development professionals with troubleshooting guides and frequently asked questions (FAQs) for experiments involving **KRAS G12C Inhibitor 32**.

Frequently Asked Questions (FAQs)

Q1: What are the key considerations for determining the optimal treatment duration with **KRAS G12C Inhibitor 32** in preclinical models?

Optimizing treatment duration involves balancing efficacy with the emergence of resistance. Key factors include the specific cancer model, the dosing schedule, and the molecular characteristics of the tumor. Continuous daily dosing is a standard approach; however, intermittent or "pulsatile" dosing regimens are being explored as a strategy to delay adaptive resistance.[1][2] High-dose pulsatile treatment with MAPK pathway inhibitors has been suggested as a way to alleviate adaptive resistance while maintaining tumor control.[1][2] Researchers should consider evaluating both continuous and intermittent schedules to determine the most effective and durable response in their specific model system.

Q2: What are the known mechanisms of resistance to KRAS G12C inhibitors like Inhibitor 32, and how do they impact treatment duration?

© 2026 BenchChem. All rights reserved.

Resistance to KRAS G12C inhibitors can be categorized as "on-target" or "off-target" and significantly limits long-term efficacy.[3]

- On-target resistance involves genetic changes to the KRAS gene itself, such as secondary mutations in the switch-II pocket that prevent the inhibitor from binding, or amplification of the KRAS G12C allele.[3][4][5]
- Off-target resistance occurs through the activation of alternative signaling pathways that bypass the need for KRAS G12C signaling.[3][4][5] This frequently includes the reactivation of the MAPK and PI3K/AKT/mTOR pathways through various means, such as activating mutations in other RAS isoforms (e.g., NRAS), BRAF, or PIK3CA, amplification of receptor tyrosine kinases (RTKs) like MET and EGFR, or loss-of-function mutations in tumor suppressor genes like PTEN.[3][4][5][6]

The emergence of these resistance mechanisms is a primary driver for treatment discontinuation and highlights the need for strategies to overcome or delay their onset.

Q3: Which biomarkers can predict response or resistance to **KRAS G12C Inhibitor 32**, thereby guiding treatment duration?

Several biomarkers are emerging to predict the efficacy of KRAS G12C inhibitors:

- Co-mutations in Tumor Suppressor Genes: Alterations in STK11 and KEAP1 are often associated with poorer outcomes with KRAS G12C inhibitor monotherapy.[7][8]
- TTF-1 (NKX2-1) Expression: Low expression of Thyroid Transcription Factor-1 (TTF-1) in lung adenocarcinoma has been identified as a negative predictive biomarker for sotorasib, correlating with shorter progression-free and overall survival.[7][9]
- Circulating Tumor DNA (ctDNA) Dynamics: The clearance of KRAS G12C mutant ctDNA from plasma shortly after starting treatment is a strong early indicator of response and is associated with improved clinical outcomes.[7][9]
- RAS-RAF Protein Interaction: Higher levels of RAS-RAF protein interaction in tumors may predict a better response to KRAS G12C inhibitors.[10] A proximity ligation assay can be used to measure this interaction.[10]

© 2026 BenchChem. All rights reserved.

Monitoring these biomarkers can help stratify experimental groups and provide a rationale for adjusting treatment duration or exploring combination therapies.

Troubleshooting Guides

Problem: Rapidly acquired resistance to Inhibitor 32 in our cell line model.

- Question: We are observing a loss of response to Inhibitor 32 in our KRAS G12C mutant cell line much sooner than expected. How can we investigate the mechanism of resistance?
- Answer:
  - Confirm Resistance Phenotype: First, re-confirm the loss of sensitivity by performing a dose-response cell viability assay (e.g., MTT or CellTiter-Glo) on the resistant cells compared to the parental, sensitive cells. A significant shift in the IC50 value will confirm resistance.
  - Analyze Signaling Pathways: Use Western blotting to check for reactivation of downstream signaling pathways in the resistant cells, even in the presence of Inhibitor 32. Key proteins to probe include phosphorylated ERK (p-ERK), phosphorylated AKT (p-AKT), and phosphorylated S6 (p-S6).[6][11] Reactivation of these pathways suggests bypass signaling.[6]
  - Sequence for New Mutations: Perform genomic sequencing (whole-exome or targeted sequencing) on the resistant cells to identify potential on-target secondary KRAS mutations or off-target mutations in genes like NRAS, BRAF, EGFR, or MET.[4][5]
  - Evaluate Adaptive Dosing: Consider implementing an adaptive or intermittent dosing schedule in a new culture of the parental cell line.[12] This approach, which involves treatment-free periods, may delay the emergence of resistant clones.[12]

Problem: High variability in tumor response in our in vivo xenograft study.

- Question: In our mouse xenograft study with Inhibitor 32, we see a wide range of tumor growth inhibition, with some tumors responding well and others progressing. What could be causing this variability?

© 2026 BenchChem. All rights reserved.

- Answer:
  - Assess Baseline Tumor Heterogeneity: It is possible that the initial tumor cell population was heterogeneous. Analyze baseline tumor samples (if available) for co-mutations in genes like STK11 and KEAP1, which are associated with diminished benefit from monotherapy.[7]
  - Monitor Pharmacodynamics: Collect tumor biopsies at different time points to assess target engagement. This can be done by measuring the levels of p-ERK to confirm that Inhibitor 32 is effectively suppressing the MAPK pathway in the tumors.[11] Inconsistent pathway inhibition across animals could point to issues with drug formulation or administration.
  - Analyze the Tumor Microenvironment (TME): The TME can significantly influence therapeutic response.[13] Consider performing immunohistochemistry (IHC) or flow cytometry on tumor samples to assess the immune landscape, as some KRAS-mutant tumors are associated with an immunosuppressive microenvironment.[14]
  - Implement ctDNA Monitoring: If feasible, collect serial blood samples to monitor KRAS G12C ctDNA levels. A rapid clearance of ctDNA is a good prognostic marker, and its persistence or re-emergence can predict progression.[7][9]

Data Presentation

Table 1: Efficacy of Sotorasib in KRAS G12C-Mutated NSCLC by Co-mutation Status (CodeBreaK 100 Trial)[7]

© 2026 BenchChem. All rights reserved.

Biomarker	Subgroup	Objective Response Rate (ORR)	Median Progression-Free Survival (PFS)	Median Overall Survival (OS)
STK11	STK11-mutant	50%	6.8 months	15.3 months
STK11 wild-type	33%	6.8 months	12.5 months	
KEAP1	KEAP1-mutant	20%	4.5 months	6.2 months
KEAP1 wild-type	44%	8.2 months	14.5 months	

Experimental Protocols

Protocol 1: Cell Viability (MTT) Assay for IC50 Determination[3]

Objective: To determine the concentration of Inhibitor 32 that inhibits cell growth by 50% (IC50).

Procedure:

- Cell Seeding: Seed KRAS G12C mutant cells in a 96-well plate at a density of 3,000-5,000 cells per well in 100 µL of complete growth medium. Incubate overnight to allow for cell attachment.[3]
- Compound Treatment: Prepare serial dilutions of Inhibitor 32 in complete growth medium. A typical concentration range would be from 100 µM down to 1 pM.[15] Add 100 µL of the diluted compound to the appropriate wells. Include vehicle-only (e.g., DMSO) wells as a control.
- Incubation: Incubate the plate for 72 hours at 37°C in a humidified 5% CO2 incubator.[3]
- MTT Addition: Add 10 µL of 5 mg/mL MTT solution to each well and incubate for 2-4 hours at 37°C until a purple precipitate is visible.[3]
- Solubilization: Carefully remove the medium and add 100 µL of a solubilization solution (e.g., DMSO) to each well to dissolve the formazan crystals.[3]

© 2026 BenchChem. All rights reserved.

- Absorbance Reading: Mix gently on an orbital shaker for 15 minutes and read the absorbance at 570 nm using a microplate reader.[3][15]
- Data Analysis: Calculate the percentage of cell viability relative to the vehicle-treated control. Plot the viability against the log of the inhibitor concentration and use non-linear regression to determine the IC50 value.[15]

Protocol 2: Western Blot for Pathway Analysis[11]

Objective: To assess the effect of Inhibitor 32 on the phosphorylation status of key downstream signaling proteins like ERK.

Procedure:

- Cell Treatment: Seed cells in 6-well plates and grow to 70-80% confluency. Treat cells with various concentrations of Inhibitor 32 for a specified time (e.g., 2, 6, or 24 hours).[11]
- Lysis: Wash cells with ice-cold PBS and lyse with RIPA buffer containing protease and phosphatase inhibitors.[11]
- Protein Quantification: Clarify lysates by centrifugation and determine the protein concentration of each sample using a BCA assay.[11]
- Sample Preparation: Denature equal amounts of protein by boiling in Laemmli sample buffer.[11]
- SDS-PAGE and Transfer: Separate proteins by SDS-PAGE and transfer them to a PVDF membrane.[11]
- Blocking and Antibody Incubation: Block the membrane for 1 hour at room temperature. Incubate the membrane with primary antibodies (e.g., anti-p-ERK, anti-total-ERK, anti-GAPDH) overnight at 4°C.[11]
- Secondary Antibody and Detection: Wash the membrane and incubate with HRP-conjugated secondary antibodies for 1 hour at room temperature. Apply a chemiluminescent substrate and acquire images using a digital imaging system.[11]

© 2026 BenchChem. All rights reserved.

Protocol 3: In Vivo Xenograft Efficacy Study[15]

Objective: To evaluate the anti-tumor efficacy of Inhibitor 32 in a mouse xenograft model.

Procedure:

- Cell Implantation: Subcutaneously inject 1-5 x 10^6 KRAS G12C mutant cells in a suitable medium (e.g., PBS or Matrigel) into the flank of immunocompromised mice.[15]
- Tumor Growth and Randomization: Monitor tumor growth by measuring tumor volume with calipers 2-3 times per week (Tumor Volume = 0.5 x Length x Width^2). When tumors reach an average volume of 100-200 mm^3, randomize the mice into treatment and control groups.[15]
- Drug Administration: Administer Inhibitor 32 or vehicle control to the respective groups via the determined route (e.g., oral gavage) at the predetermined dose and schedule (e.g., daily for 21 days).[15]
- Monitoring: Monitor tumor volume and the body weight of the mice 2-3 times per week as an indicator of efficacy and toxicity, respectively.[15]
- Endpoint: At the end of the study (or when tumors reach a predetermined size), euthanize the mice and excise the tumors for further analysis (e.g., Western blot, IHC).

Mandatory Visualizations

© 2026 BenchChem. All rights reserved.

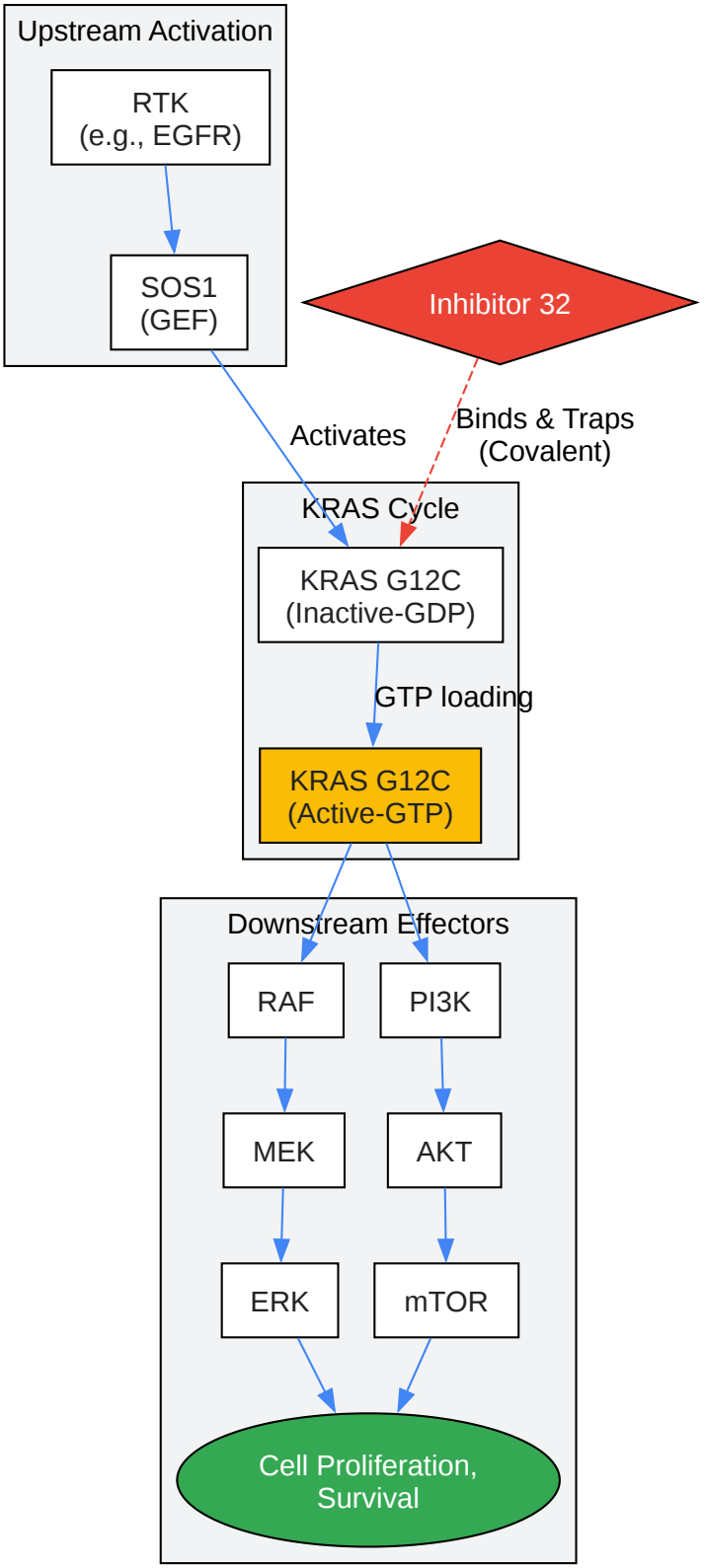

Click to download full resolution via product page

© 2026 BenchChem. All rights reserved.

Caption: Simplified KRAS G12C signaling pathway and the mechanism of action for Inhibitor 32.

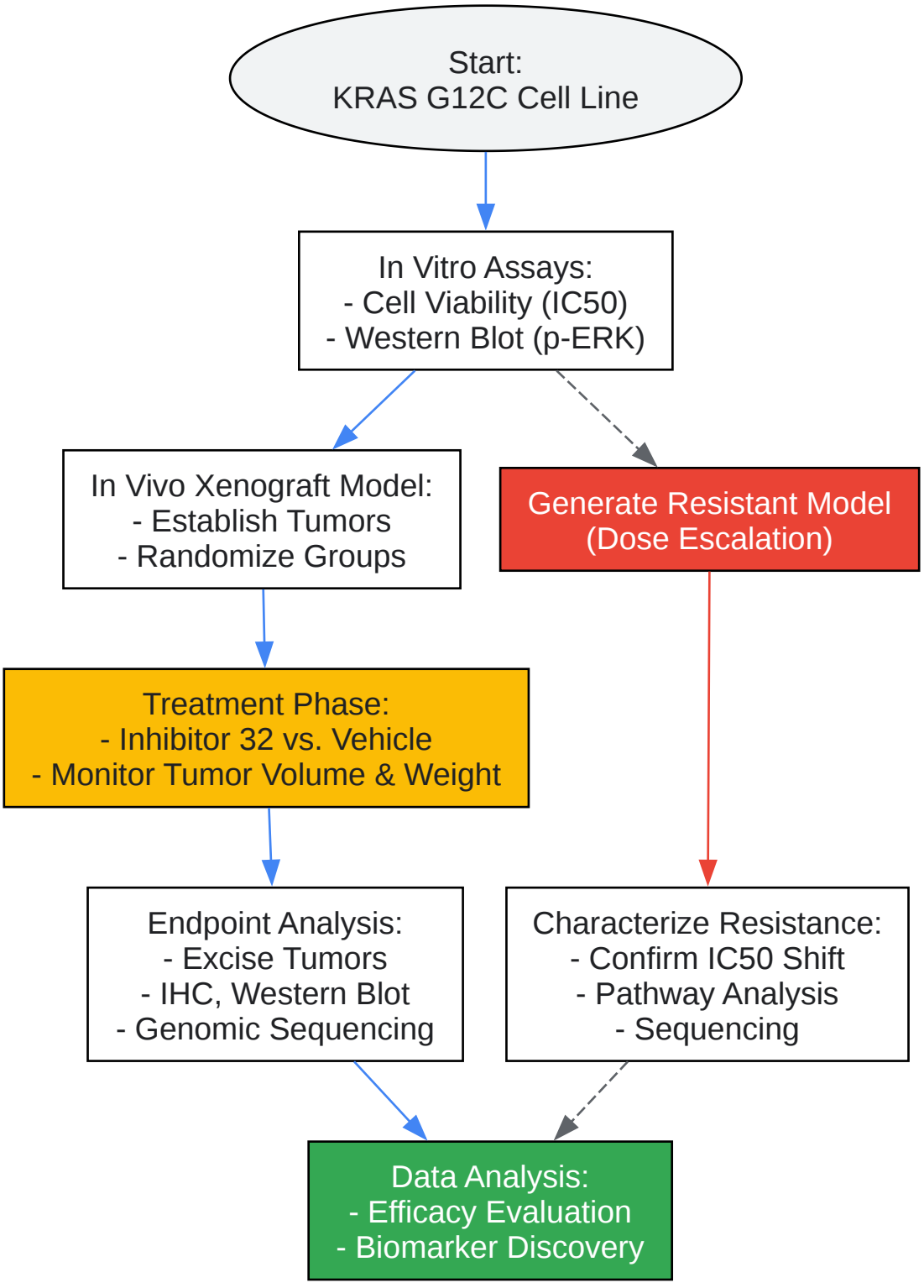

Click to download full resolution via product page

© 2026 BenchChem. All rights reserved.

Caption: Experimental workflow for evaluating the efficacy and resistance of Inhibitor 32.

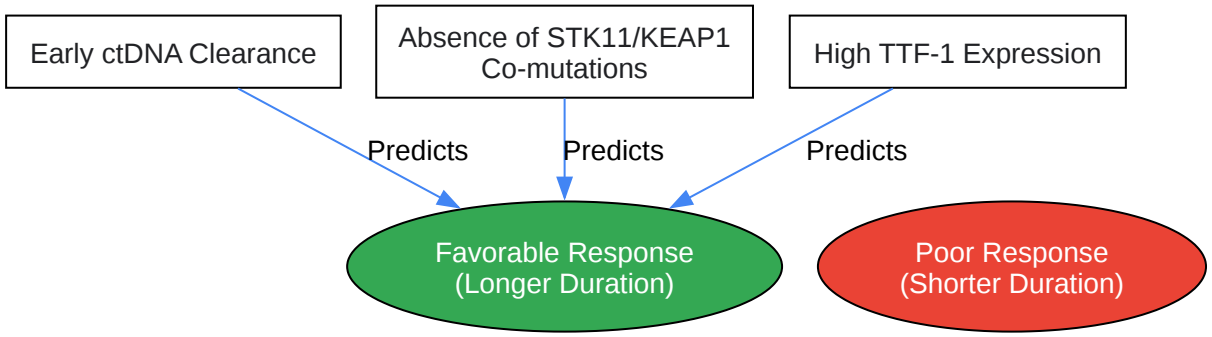

Click to download full resolution via product page

Caption: Logical relationship between biomarker status and clinical response to KRAS G12C inhibition.

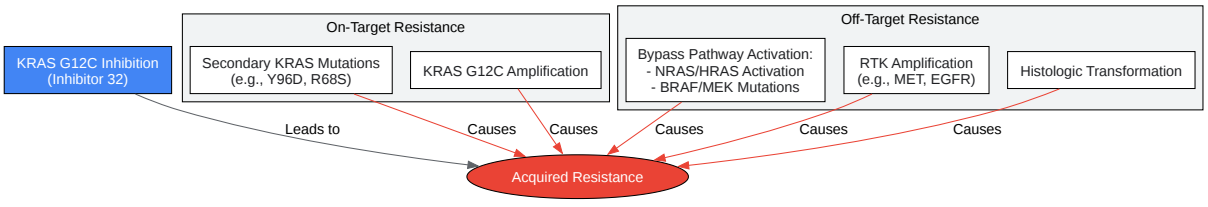

Click to download full resolution via product page

Caption: Overview of on-target and off-target mechanisms of acquired resistance to KRAS G12C inhibitors.

© 2026 BenchChem. All rights reserved.

Need Custom Synthesis?

BenchChem offers custom synthesis for rare earth carbides and specific isotopiclabeling.

Email: info@benchchem.com or Request Quote Online.

References

- 1. aacrjournals.org [aacrjournals.org]
- 2. researchgate.net [researchgate.net]
- 3. benchchem.com [benchchem.com]
- 4. Frontiers | Mechanisms of resistance to KRASG12C inhibitors in KRASG12C-mutated non-small cell lung cancer [frontiersin.org]
- 5. Mechanisms of resistance to KRASG12C inhibitors in KRASG12C-mutated non-small cell lung cancer - PMC [pmc.ncbi.nlm.nih.gov]
- 6. Mechanisms of resistance to KRASG12C-targeted therapy - PMC [pmc.ncbi.nlm.nih.gov]
- 7. benchchem.com [benchchem.com]
- 8. Advances in biomarkers of resistance to KRAS mutation-targeted inhibitors - PMC [pmc.ncbi.nlm.nih.gov]
- 9. New biomarker may guide best use of KRAS inhibitors in lung cancer - ecancer [ecancer.org]
- 10. Moffitt Study Finds Key Biomarker to Predict KRASG12C Inhibitor Effectiveness in Lung Cancer | Moffitt [moffitt.org]
- 11. benchchem.com [benchchem.com]
- 12. Delaying Emergence of Resistance to KRAS Inhibitors with Adaptive Therapy: “Treatment-to-Contain” Instead of “Treatment-to-Cure” [techscience.com]
- 13. Frontiers | Non-genetic adaptive resistance to KRASG12C inhibition: EMT is not the only culprit [frontiersin.org]
- 14. STAT3 Inhibition Prevents Adaptive Resistance and Augments NK Cell Cytotoxicity to KRASG12C Inhibitors in Nonsmall Cell Lung Cancer - PMC [pmc.ncbi.nlm.nih.gov]
- 15. benchchem.com [benchchem.com]

To cite this document: BenchChem. [Technical Support Center: Optimizing Treatment Duration with KRAS G12C Inhibitor 32]. BenchChem, [2026]. [Online PDF]. Available at:

© 2026 BenchChem. All rights reserved.

[https://www.benchchem.com/product/b15141959/docs#technical-support-center-optimizing-treatment-duration-with-kras-g12c-inhibitor-32]

Disclaimer & Data Validity:

The information provided in this document is for Research Use Only (RUO) and is strictly not intended for diagnostic or therapeutic procedures. While BenchChem strives to provide accurate protocols, we make no warranties, express or implied, regarding the fitness of this product for every specific experimental setup.

Technical Support: The protocols provided are for reference purposes. Unsure if this reagent suits your experiment?

Need Industrial/Bulk Grade? Request Custom Synthesis Quote

BenchChem

Our mission is to be the trusted global source of essential and advanced chemicals, empowering scientists and researchers to drive progress in science and industry.

Contact

Address: 3281 E Guasti Rd

Ontario, CA 91761, United States

Phone: (601) 213-4426

Email: info@benchchem.com

Contact our Ph.D. Support Team for a compatibility check

© 2026 BenchChem. All rights reserved.