Troubleshooting PB118 instability in long-term cell culture

Author: BenchChem Technical Support Team. **Date**: April 2026

Compound of Interest

Compound Name: *PB118*

Cat. No.: *B15137978*

Get Quote

Technical Support Center: PB118 in Long-Term Cell Culture

Welcome to the technical support center for **PB118**, a potent and selective Histone Deacetylase 6 (HDAC6) inhibitor. This resource is designed for researchers, scientists, and drug development professionals to provide guidance on troubleshooting common issues related to the stability and use of **PB118** in long-term cell culture experiments.

Frequently Asked Questions (FAQs)

Q1: What is **PB118** and what is its primary mechanism of action?

PB118 is a potent and selective small molecule inhibitor of Histone Deacetylase 6 (HDAC6). Its mechanism of action is multifaceted, particularly in the context of neurodegenerative diseases like Alzheimer's. **PB118** has been shown to:

- Increase the phagocytic clearance of amyloid-beta (Aβ) peptides by microglia.[1]
- Reduce the generation of Aβ42.[1][2]

© 2026 BenchChem. All rights reserved.

- Decrease the phosphorylation of tau protein.[1]
- Enhance the stability of the microtubule network by increasing acetylated α-tubulin levels.[1] [2]
- Reduce neuroinflammation by decreasing the levels of pro-inflammatory cytokines and chemokines.[2]

Q2: I am observing a decrease in the efficacy of **PB118** over several days in my cell culture. What could be the cause?

Decreased efficacy of a small molecule inhibitor like **PB118** in long-term culture can be attributed to several factors related to its stability in the culture medium.[1] Potential causes include:

- Inherent Instability: The compound may have limited stability in aqueous solutions at 37°C. [1]
- Interaction with Media Components: Components within the cell culture medium, such as amino acids or vitamins, may react with **PB118**, leading to its degradation.[1]
- pH Shifts: Changes in the pH of the culture medium due to cellular metabolism can affect the stability of the compound.[1]
- Adsorption to Plasticware: The compound may adsorb to the surface of the cell culture plates or flasks, reducing its effective concentration in the medium.
- Cellular Metabolism: The cells themselves may metabolize **PB118** over time, leading to a decrease in its active concentration.

Q3: How can I assess the stability of **PB118** in my specific cell culture conditions?

To determine the stability of **PB118** in your experimental setup, you can perform a stability study. This typically involves incubating **PB118** in your cell culture medium (with and without cells) at 37°C and collecting aliquots at various time points (e.g., 0, 2, 8, 24, 48 hours).[1] The concentration of the remaining **PB118** at each time point can then be quantified using High-Performance Liquid Chromatography-Mass Spectrometry (HPLC-MS).[1]

© 2026 BenchChem. All rights reserved.

Q4: What are some general recommendations for storing and handling **PB118** stock solutions?

To ensure the integrity of your **PB118** stock solutions, follow these guidelines:

- Storage: Store stock solutions, typically dissolved in a solvent like DMSO, at -20°C or -80°C in small, single-use aliquots to avoid repeated freeze-thaw cycles.[1]
- Light Sensitivity: Protect stock solutions and working solutions from light, as some small molecules can be light-sensitive.
- Fresh Dilutions: Prepare fresh dilutions of **PB118** in your cell culture medium for each experiment from a frozen stock aliquot.

Troubleshooting Guide: **PB118** Instability in Long-Term Cell Culture

This guide provides a systematic approach to troubleshooting common issues encountered during the long-term use of **PB118** in cell culture.

© 2026 BenchChem. All rights reserved.

Observed Problem	Potential Cause	Recommended Solution
Gradual loss of expected phenotype (e.g., decreased acetylated α-tubulin levels over time).	PB118 Degradation in Media	1. Replenish PB118: For long-term experiments, consider replacing the medium with freshly prepared medium containing PB118 every 24-48 hours. 2. Assess Stability: Perform an HPLC-MS stability study to determine the half-life of PB118 in your specific culture conditions.[1] This will inform the optimal frequency of media changes.
High variability in experimental results between replicates.	Inconsistent PB118 Concentration	1. Precise Pipetting: Ensure accurate and consistent pipetting when preparing stock solutions and dilutions. 2. Complete Solubilization: Vortex stock solutions thoroughly to ensure complete dissolution of PB118. Visually inspect for any precipitate before diluting into culture medium.[1] 3. Low-Binding Plastics: Use low-protein-binding plates and pipette tips to minimize adsorption of the compound.[1]
Unexpected cytotoxicity or off-target effects at later time points.	Accumulation of Toxic Metabolites or Degradation Products	1. Regular Media Changes: Frequent replacement of the culture medium will help to remove any potentially toxic byproducts. 2. Dose-Response and Time-Course: Perform a thorough dose-response and time-course experiment to

© 2026 BenchChem. All rights reserved.

		identify the optimal non-toxic concentration of PB118 for your specific cell line and experiment duration.
Cells appear stressed or unhealthy after prolonged exposure to PB118.	Solvent Toxicity	1. Minimize Solvent Concentration: Ensure the final concentration of the solvent (e.g., DMSO) in the culture medium is below the toxic threshold for your cell line (typically <0.1-0.5%).[3] 2. Vehicle Control: Always include a vehicle control (medium with the same concentration of solvent but without PB118) in your experiments to differentiate between compound-specific effects and solvent-induced toxicity.[3]

Experimental Protocols

1. Assessment of **PB118** Stability in Cell Culture Medium

This protocol outlines a general method to determine the stability of **PB118** in your specific cell culture medium using HPLC-MS.

- Materials:
  - **PB118** stock solution (e.g., 10 mM in DMSO)
  - Your specific cell culture medium (with and without serum)
  - 24-well tissue culture plates
  - HPLC-MS system

© 2026 BenchChem. All rights reserved.

- Procedure:
  - Prepare a working solution of **PB118** at your final experimental concentration (e.g., 10 µM) in your cell culture medium.
  - Add 1 mL of the **PB118**-containing medium to triplicate wells of a 24-well plate.
  - Incubate the plate at 37°C in a humidified incubator with 5% CO_2.
  - At designated time points (e.g., 0, 2, 8, 24, 48 hours), collect a 100 µL aliquot from each well.
  - Process the samples for HPLC-MS analysis to quantify the remaining **PB118** concentration.
  - Calculate the percentage of **PB118** remaining at each time point relative to the 0-hour time point.

2. Aβ Phagocytosis Assay with Microglia

This protocol provides a method to assess the effect of **PB118** on the phagocytosis of fluorescently labeled Aβ42 by microglial cells.

- Materials:
  - Primary microglia or a microglial cell line (e.g., BV2)
  - Fluorescently labeled Aβ42 peptides
  - **PB118**
  - Culture plates and media
  - Fluorescence microscope or flow cytometer
- Procedure:
  - Plate microglial cells and allow them to adhere overnight.

© 2026 BenchChem. All rights reserved.

- Pre-treat the cells with various concentrations of **PB118** (or vehicle control) for a predetermined time (e.g., 24 hours).
- Prepare aggregated fluorescent Aβ42 by incubating it at 37°C for at least 1 hour.[4]
- Add the aggregated fluorescent Aβ42 to the **PB118**-treated cells and incubate for 1-3 hours at 37°C.
- Wash the cells extensively with cold PBS to remove extracellular Aβ42.
- Fix the cells with 4% paraformaldehyde.
- Quantify the internalized Aβ42 using fluorescence microscopy and image analysis software (e.g., ImageJ) or by flow cytometry.[5][6]

3. Western Blot for Acetylated α-Tubulin

This protocol describes how to measure changes in acetylated α-tubulin levels in response to **PB118** treatment.

- Materials:
  - Cell line of interest
  - **PB118**
  - Lysis buffer
  - Protein assay reagents
  - SDS-PAGE and Western blotting equipment
  - Primary antibodies: anti-acetylated-α-tubulin and anti-α-tubulin (as a loading control)
  - HRP-conjugated secondary antibody
  - Chemiluminescent substrate
- Procedure:

© 2026 BenchChem. All rights reserved.

- Plate cells and treat with various concentrations of **PB118** (or vehicle control) for the desired duration.
- Wash the cells with cold PBS and lyse them in lysis buffer.
- Determine the protein concentration of each lysate.
- Separate equal amounts of protein from each sample by SDS-PAGE and transfer to a PVDF or nitrocellulose membrane.
- Block the membrane and then incubate with the primary antibody against acetylated α-tubulin overnight at 4°C.
- Wash the membrane and incubate with the HRP-conjugated secondary antibody.
- Detect the signal using a chemiluminescent substrate and an imaging system.
- Strip the membrane and re-probe with an antibody against total α-tubulin to normalize for protein loading.
- Quantify the band intensities to determine the relative change in acetylated α-tubulin levels.[7][8]

Signaling Pathways and Workflows

Below are diagrams illustrating the key signaling pathway involving HDAC6 and a general workflow for troubleshooting **PB118** stability.

© 2026 BenchChem. All rights reserved.

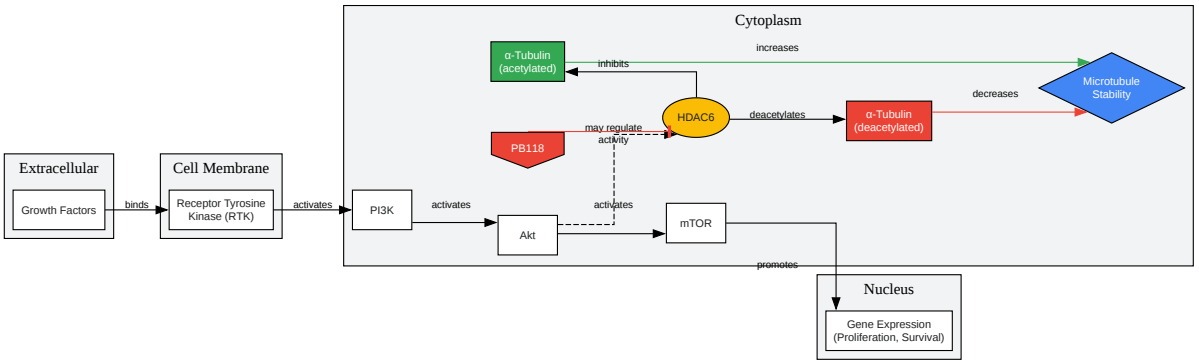

Click to download full resolution via product page

Caption: HDAC6 signaling pathway and the effect of **PB118**.

© 2026 BenchChem. All rights reserved.

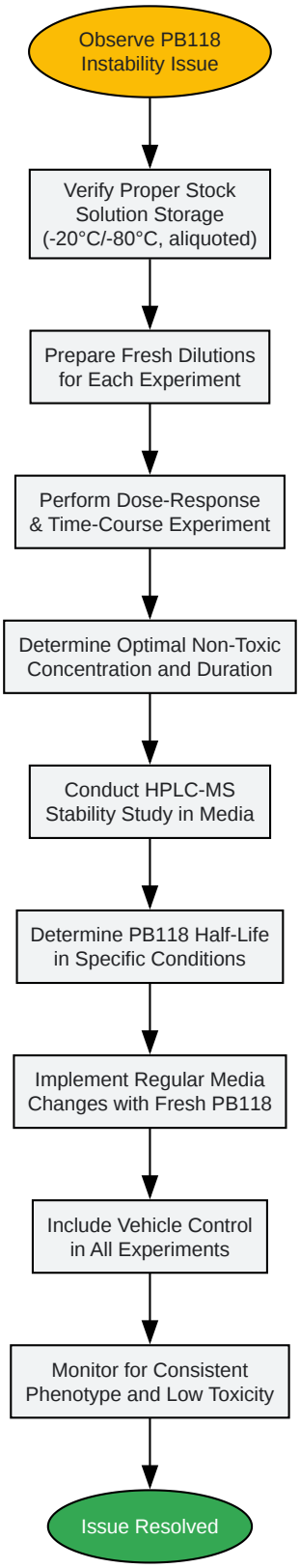

Click to download full resolution via product page

Caption: Workflow for troubleshooting **PB118** instability.

© 2026 BenchChem. All rights reserved.

Need Custom Synthesis?

BenchChem offers custom synthesis for rare earth carbides and specific isotopiclabeling.

Email: info@benchchem.com or Request Quote Online.

References

- 1. benchchem.com [benchchem.com]
- 2. HDAC6 alleviates prion peptide-mediated neuronal death via modulating PI3K-Akt-mTOR pathway - PubMed [pubmed.ncbi.nlm.nih.gov]
- 3. benchchem.com [benchchem.com]
- 4. Microglial Phagocytosis Assay [bio-protocol.org]
- 5. Microglial Phagocytosis Assay [en.bio-protocol.org]
- 6. Microglial Phagocytosis Assay - PMC [pmc.ncbi.nlm.nih.gov]
- 7. ri.conicet.gov.ar [ri.conicet.gov.ar]
- 8. Quantification of acetylated tubulin - PubMed [pubmed.ncbi.nlm.nih.gov]
- To cite this document: BenchChem. [Troubleshooting PB118 instability in long-term cell culture]. BenchChem, [2026]. [Online PDF]. Available at: [https://www.benchchem.com/product/b15137978/docs#troubleshooting-pb118-instability-in-long-term-cell-culture]

Disclaimer & Data Validity:

The information provided in this document is for Research Use Only (RUO) and is strictly not intended for diagnostic or therapeutic procedures. While BenchChem strives to provide accurate protocols, we make no warranties, express or implied, regarding the fitness of this product for every specific experimental setup.

Technical Support: The protocols provided are for reference purposes. Unsure if this reagent suits your experiment?

Need Industrial/Bulk Grade? Request Custom Synthesis Quote

© 2026 BenchChem. All rights reserved.

BenchChem

Our mission is to be the trusted global source of essential and advanced chemicals, empowering scientists and researchers to drive progress in science and industry.

Contact

Address: 3281 E Guasti Rd

Ontario, CA 91761, United States

Phone: (601) 213-4426

Email: info@benchchem.com

Contact our Ph.D. Support Team for a compatibility check

© 2026 BenchChem. All rights reserved.