Technical Support Center: Optimization of Reaction Conditions for Phenoxybutyrate Synthesis

Author: BenchChem Technical Support Team. **Date**: April 2026

Compound of Interest

Compound Name:	*Ethyl 4-(2,3-dimethylphenoxy)butyrate*
Cat. No.:	*B1509702*

Get Quote

Welcome to the technical support center for the synthesis of phenoxybutyrate and its derivatives. This guide is designed for researchers, scientists, and professionals in drug development who are looking to optimize their reaction conditions and troubleshoot common issues encountered during synthesis. Here, we move beyond simple protocols to explain the "why" behind experimental choices, ensuring a deeper understanding and more reliable outcomes.

I. Foundational Principles: The Williamson Ether Synthesis

The most common and versatile method for synthesizing phenoxybutyrates is the Williamson ether synthesis. This reaction involves the nucleophilic substitution (SN2) of an alkyl halide by a phenoxide ion.[1][2][3] Understanding the mechanism is crucial for troubleshooting.

Core Reaction:

© 2026 BenchChem. All rights reserved.

- Step 1: Deprotonation. A phenol is treated with a base to form a more nucleophilic phenoxide anion.
- Step 2: Nucleophilic Attack. The phenoxide attacks the electrophilic carbon of an alkyl halide (or a similar substrate with a good leaving group), displacing the halide and forming the ether linkage.[1][3]

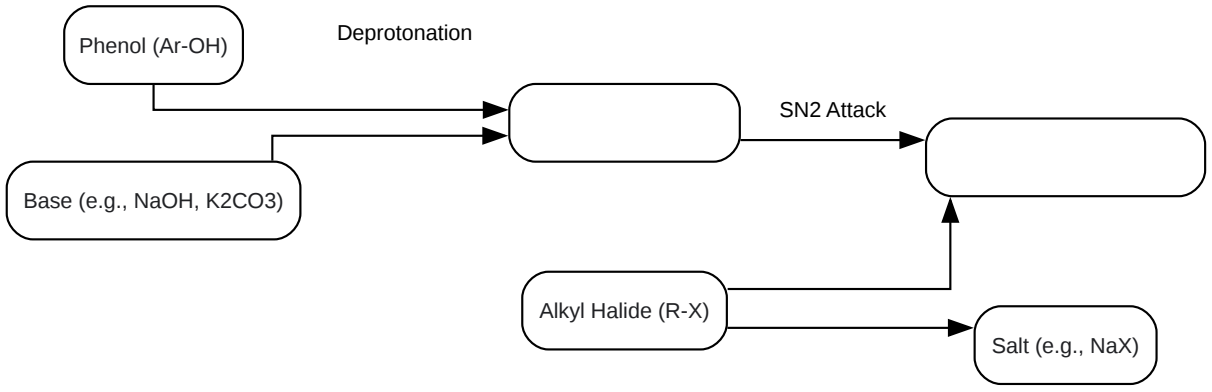

Click to download full resolution via product page

Caption: General workflow of the Williamson ether synthesis.

II. Troubleshooting Guide & FAQs

This section addresses specific problems that may arise during the synthesis of phenoxybutyrate.

FAQ 1: Low or No Product Yield

Question: I'm not getting any of my desired phenoxybutyrate, or the yield is very low. What's going wrong?

Answer: Low or no yield is a common issue that can stem from several factors. Let's break down the possibilities:

A. Incomplete Deprotonation of the Phenol

- Causality: The phenoxide is the key nucleophile. If the phenol is not sufficiently deprotonated, the concentration of the active nucleophile will be too low for the reaction to proceed efficiently.[4] Phenols are more acidic than aliphatic alcohols, but a base of appropriate strength is still required.[5]

- Troubleshooting Steps:

  - Base Selection: For simple phenols, common bases like sodium hydroxide (NaOH) or potassium carbonate (K_2CO_3) are often sufficient.[5][6] For less acidic or sterically hindered phenols, a stronger base like sodium hydride (NaH) may be necessary.

  - Anhydrous Conditions: If using a very strong, moisture-sensitive base like NaH, ensure your solvent and glassware are scrupulously dry. Water will quench the base, rendering it ineffective.[4]

  - Reaction Time and Temperature: Allow sufficient time for the deprotonation to complete before adding the alkyl halide. Gentle warming can sometimes facilitate this step.

B. Poor Leaving Group on the Alkylating Agent

- Causality: The SN2 reaction requires a good leaving group that can stabilize the negative charge as it departs.

- Troubleshooting Steps:

  - Halide Reactivity: The reactivity of alkyl halides in SN2 reactions follows the trend: I > Br > Cl > F. If you are using an alkyl chloride and getting low yields, consider switching to the corresponding bromide or iodide.

  - Alternative Leaving Groups: Sulfonates, such as tosylates (OTs) or mesylates (OMs), are excellent leaving groups and can be used in place of halides.[2][3]

C. Steric Hindrance

- Causality: The Williamson ether synthesis is an SN2 reaction, which is highly sensitive to steric hindrance.[1][4] If either the phenoxide or the alkyl halide is sterically bulky, the nucleophile will have difficulty accessing the electrophilic carbon.

© 2026 BenchChem. All rights reserved.

- Troubleshooting Steps:
  - Substrate Choice: The reaction works best with primary alkyl halides.[1][3] Secondary alkyl halides can also be used, but elimination reactions become a significant competing pathway.[3][4] Tertiary alkyl halides will almost exclusively lead to elimination products.[3]
  - Retrosynthetic Planning: When synthesizing an unsymmetrical ether, there are two possible routes. Always choose the pathway that involves the less sterically hindered alkyl halide.[7]

D. Inadequate Reaction Time or Temperature

- Causality: Like most chemical reactions, the Williamson ether synthesis requires a certain activation energy. If the temperature is too low or the reaction time too short, the reaction may not proceed to completion.[1]
- Troubleshooting Steps:
  - Monitoring the Reaction: Use techniques like Thin Layer Chromatography (TLC) or Gas Chromatography (GC) to monitor the consumption of starting materials and the formation of the product.[4]
  - Temperature Optimization: While higher temperatures can increase the reaction rate, they can also favor competing elimination reactions, especially with secondary alkyl halides.[4][8] A typical temperature range for Williamson ether synthesis is 50-100°C.[1][4]

FAQ 2: Formation of an Alkene Byproduct

Question: My final product is contaminated with a significant amount of an alkene. How can I minimize this side reaction?

Answer: The formation of an alkene is a classic sign that an E2 elimination reaction is competing with the desired SN2 substitution.[4] This is particularly problematic when using secondary alkyl halides.[4]

A. Understanding the Competition: SN2 vs. E2

© 2026 BenchChem. All rights reserved.

- Causality: Alkoxides are not only good nucleophiles but also strong bases.[4] When the alkoxide acts as a base, it can abstract a proton from a carbon adjacent to the carbon bearing the leaving group, leading to the formation of a double bond.

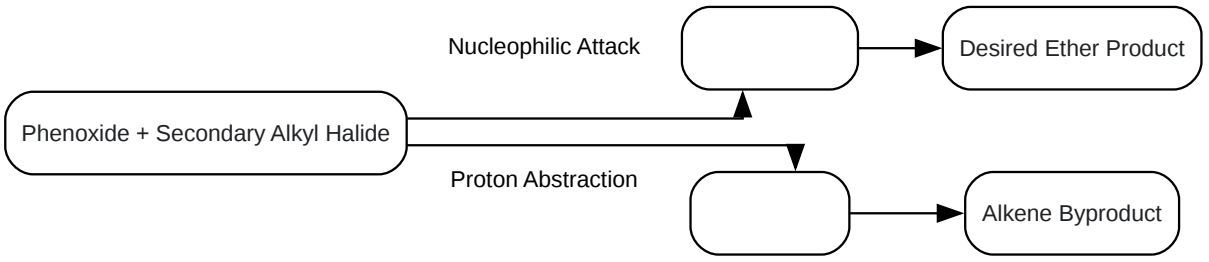

Click to download full resolution via product page

Caption: Competing SN2 and E2 pathways.

B. Strategies to Favor Substitution over Elimination

- Lower the Reaction Temperature: Elimination reactions generally have a higher activation energy than substitution reactions. Therefore, running the reaction at a lower temperature will favor the SN2 pathway.[4]
- Use a Less Sterically Hindered Base/Nucleophile: If possible, choose a less bulky alkoxide. However, in phenoxybutyrate synthesis, the phenoxide is fixed.
- Solvent Choice: Polar aprotic solvents like DMF, DMSO, or THF can be good choices as they solvate the cation of the alkoxide, leaving the "naked" anion as a more potent nucleophile.[6] [9]

FAQ 3: Difficulty in Product Purification

Question: I've managed to synthesize my phenoxybutyrate, but I'm having trouble purifying it. What are the best methods?

Answer: Purification is a critical step to obtain a high-purity product. The appropriate method will depend on the nature of the impurities.

A. Removing Unreacted Phenol

© 2026 BenchChem. All rights reserved.

- Causality: Unreacted starting phenol is a common impurity.
- Purification Protocol:
  - Aqueous Workup: After the reaction is complete, perform an aqueous workup.
  - Base Extraction: Wash the organic layer with a dilute aqueous base solution, such as 5% sodium hydroxide.[5] The basic solution will deprotonate the acidic unreacted phenol, converting it into its water-soluble phenoxide salt, which will be extracted into the aqueous layer.
  - Separation: The desired phenoxybutyrate, being an ether, is not acidic and will remain in the organic layer. The two layers can then be separated using a separatory funnel.[5]

B. Removing Other Impurities

- Crystallization: If the phenoxybutyrate is a solid at room temperature, recrystallization from a suitable solvent is an excellent method for achieving high purity.[5]
- Column Chromatography: For liquid products or complex mixtures of impurities, column chromatography is a powerful purification technique.[10]
- Distillation: If the product is a liquid with a boiling point significantly different from the impurities, distillation under reduced pressure can be effective.[11][12]

III. Optimizing Reaction Conditions: A Tabular Guide

The choice of solvent and base is critical for the success of the Williamson ether synthesis. The following table provides a summary of common choices and their characteristics.

© 2026 BenchChem. All rights reserved.

Parameter	Options	Rationale and Considerations
Base	NaOH, KOH[13]	Inexpensive and effective for many simple phenols.
	K_2CO_3, Cs_2CO_3[6]	Milder bases that can be effective and are often used in polar aprotic solvents.
	NaH, KH[3][4]	Stronger bases required for less acidic phenols. Require anhydrous conditions.
Solvent	Polar Aprotic: DMF, DMSO, THF, Acetonitrile[6][9]	Generally the best choice. They accelerate SN2 reactions by solvating the cation of the alkoxide.
	Alcohols (e.g., Ethanol)[13]	Can be used, but the reaction may be slower. The alcohol can also compete as a nucleophile if a strong base is not used to fully deprotonate the phenol first.
	Aromatic Hydrocarbons (e.g., Toluene)[9]	Can be used, particularly in phase-transfer catalysis systems.

IV. Experimental Protocols

General Protocol for Phenoxybutyrate Synthesis

This protocol is a representative example and may require optimization for specific substrates.

- Deprotonation:
  - In a round-bottom flask under an inert atmosphere (e.g., nitrogen or argon), dissolve the phenol (1 equivalent) in a suitable polar aprotic solvent (e.g., DMF or THF).

© 2026 BenchChem. All rights reserved.

- Add the base (e.g., K_2CO_3, 1.5 equivalents, or NaH, 1.1 equivalents) portion-wise at room temperature or 0°C for highly exothermic reactions.
- Stir the mixture for 30-60 minutes to ensure complete formation of the phenoxide.

- Nucleophilic Substitution:
  - Slowly add the alkylating agent (e.g., ethyl 4-bromobutyrate, 1.1 equivalents) to the reaction mixture.
  - Heat the reaction to the desired temperature (e.g., 60-80°C) and monitor its progress by TLC.

- Workup and Purification:
  - Once the reaction is complete, cool the mixture to room temperature and pour it into water.
  - Extract the aqueous layer with an organic solvent like ethyl acetate or diethyl ether.[6][11]
  - Combine the organic layers and wash with a dilute base solution (e.g., 5% NaOH) to remove unreacted phenol, followed by a brine wash.
  - Dry the organic layer over anhydrous sodium sulfate or magnesium sulfate, filter, and concentrate under reduced pressure.[11]
  - Purify the crude product by column chromatography, recrystallization, or distillation.

V. References

- ResearchGate. (n.d.). Optimization of reaction conditions. Retrieved from a table within a publication on organic synthesis.
- Google Patents. (2016). CN105924345A - Preparation method for sodium phenylbutyrate.
- Williamson Ether Synthesis. (n.d.). The Williamson Ether Synthesis. Department of Chemistry, University of Massachusetts.
- ResearchGate. (2014). Can anyone help me with a Williamson ether synthesis?.

© 2026 BenchChem. All rights reserved.

- ResearchGate. (n.d.). Chemo-enzymatic synthesis of ethyl (R)-2-hydroxy-4-phenylbutyrate.
- PMC. (2024). Highly efficient synthesis of the chiral ACE inhibitor intermediate (R)-2-hydroxy-4-phenylbutyrate ethyl ester via engineered bi-enzyme coupled systems.
- ResearchGate. (2021). How to get the pure Phenylbutyric acid from Sodium phenylbutyrate?.
- Wikipedia. (n.d.). Williamson ether synthesis.
- WIPO Patentscope. (2016). 106117045 Purification method of phenylbutyric acid.
- PMC. (n.d.). Feasibility study of an alkaline-based chemical treatment for the purification of polyhydroxybutyrate produced by a mixed enriched culture.
- Benchchem. (n.d.). Troubleshooting guide for Williamson ether synthesis with secondary iodides.
- Organic Syntheses. (n.d.). γ-PHENYLBUTYRIC ACID.
- ResearchGate. (2023). (PDF) Enantioselective reduction of ethyl 2-oxo-4-phenylbutyrate to ethyl (R)-2- hydroxy-4-phenylbutyrate using stereospecific carbonyl reductase KmCR: optimization of cultivation and reaction conditions.
- PMC. (n.d.). Chemistry with an Artificial Primer of Polyhydroxybutyrate Synthase Suggests a Mechanism for Chain Termination.
- Reddit. (2015). Williamson ether synthesis trouble, 2.0.
- ResearchGate. (2025). A Practical Synthesis of Ethyl (R)- and (S)-2-Hydroxy-4-phenylbutanoate and D-Homophenylalanine Ethyl Ester Hydrochloride from L-Malic Acid | Request PDF.
- Chemistry LibreTexts. (2015). 9.6: Williamson Ether Synthesis.
- Chemistry Steps. (2022). The Williamson Ether Synthesis.
- PRISM BioLab. (2023). Reaction Conditions Optimization: The Current State.

© 2026 BenchChem. All rights reserved.

- Pubs.acs.org. (n.d.). Optimization of the Reaction Conditions for the Synthesis of Dihydrobenzofuran Neolignans.
- Google Patents. (2009). WO2015063659A1 - Process for the preparation of glycerol phenylbutyrate.
- Stack Exchange. (2021). How can we synthesize this cycloester, starting with methyl 4-phenylbutanoate?.
- Google Patents. (n.d.). EP1404638B1 - Synthesis of 4-phenylbutyric acid.
- Master Organic Chemistry. (2014). The Williamson Ether Synthesis.
- Benchchem. (n.d.). Effect of solvent choice on the synthesis of 2-Phenylbutanenitrile.
- Sanofi. (2013). Sanofi's Solvent Selection Guide: A Step Toward More Sustainable Processes.
- PMC. (2020). Production of Polyhydroxybutyrate (PHB) and Factors Impacting Its Chemical and Mechanical Characteristics.
- MDPI. (2024). Solvent Replacement Strategies for Processing Pharmaceuticals and Bio-Related Compounds—A Review.
- Benchchem. (n.d.). Common side reactions in the synthesis of alpha-Phenylaziridine-1-ethanol and how to avoid them.
- PMC. (n.d.). Multicomponent Reactions for the Synthesis of Active Pharmaceutical Ingredients.
- ResearchGate. (n.d.). Base-Regulated Synthesis of the Bestmann-Ohira or Seyferth-Gilbert Reagent Utilizing FSO2N3 | Request PDF.

Need Custom Synthesis?

BenchChem offers custom synthesis for rare earth carbides and specific isotopiclabeling.

Email: info@benchchem.com or Request Quote Online.

Sources

- 1. Williamson ether synthesis - Wikipedia [en.wikipedia.org]
- 2. Williamson Ether Synthesis - Chemistry Steps [chemistrysteps.com]
- 3. masterorganicchemistry.com [masterorganicchemistry.com]
- 4. pdf.benchchem.com [pdf.benchchem.com]
- 5. The Williamson Ether Synthesis [cs.gordon.edu]
- 6. researchgate.net [researchgate.net]
- 7. chem.libretexts.org [chem.libretexts.org]
- 8. pdf.benchchem.com [pdf.benchchem.com]
- 9. pdf.benchchem.com [pdf.benchchem.com]
- 10. WO2015063659A1 - Process for the preparation of glycerol phenylbutyrate - Google Patents [patents.google.com]
- 11. researchgate.net [researchgate.net]
- 12. Organic Syntheses Procedure [orgsyn.org]
- 13. CN105924345A - Preparation method for sodium phenylbutyrate - Google Patents [patents.google.com]

- To cite this document: BenchChem. [Technical Support Center: Optimization of Reaction Conditions for Phenoxybutyrate Synthesis]. BenchChem, [2026]. [Online PDF]. Available at: [https://www.benchchem.com/product/b1509702/docs#technical-support-center-optimization-of-reaction-conditions-for-phenoxybutyrate-synthesis]

Disclaimer & Data Validity:

The information provided in this document is for Research Use Only (RUO) and is strictly not intended for diagnostic or therapeutic procedures. While BenchChem strives to provide accurate protocols, we make no warranties, express or implied, regarding the fitness of this product for every specific experimental setup.

Technical Support: The protocols provided are for reference purposes. Unsure if this reagent suits your experiment?

Need Industrial/Bulk Grade? Request Custom Synthesis Quote

© 2026 BenchChem. All rights reserved.

BenchChem

Our mission is to be the trusted global source of essential and advanced chemicals, empowering scientists and researchers to drive progress in science and industry.

Contact

Address: 3281 E Guasti Rd

Ontario, CA 91761, United States

Phone: (601) 213-4426

Email: info@benchchem.com

Contact our Ph.D. Support Team for a compatibility check

© 2026 BenchChem. All rights reserved.