Application and Protocol Guide: Strategic Boc Protection of Hydroxybenzyl Alcohols

Author: BenchChem Technical Support Team. **Date**: May 2026

Compound of Interest

Compound Name:	*p-O-t-Boc-benzyl Alcohol*
CAS No.:	*887353-38-0*
Cat. No.:	*B015022*

Get Quote

In the landscape of modern organic synthesis, particularly within pharmaceutical and complex molecule development, the judicious use of protecting groups is a cornerstone of success.[1] The tert-butyloxycarbonyl (Boc) group is a widely employed protecting group, valued for its stability across a range of chemical environments and its facile, acid-labile removal.[2][3][4] This guide provides an in-depth exploration of the reaction conditions for the Boc protection of benzyl alcohols, with a specific focus on the synthesis of **p-O-t-Boc-benzyl alcohol**. This compound presents an interesting case of chemoselectivity, requiring the selective protection of a phenolic hydroxyl group over a primary benzylic alcohol.

This document will delve into the mechanistic rationale behind reagent and catalyst selection, provide detailed experimental protocols, and offer insights into potential side reactions and troubleshooting. The aim is to equip researchers, scientists, and drug development professionals with the technical knowledge and practical guidance necessary for the successful implementation of this critical synthetic transformation.

Understanding the Chemistry: Boc Protection of Alcohols and Phenols

© 2026 BenchChem. All rights reserved.

The introduction of a Boc group onto a hydroxyl moiety is typically achieved using di-tert-butyl dicarbonate (Boc_2O or Boc anhydride) as the electrophilic source of the Boc group.[3][5] While the protection of amines with Boc_2O is a relatively straightforward process, the reaction with less nucleophilic alcohols often requires catalytic activation.[6][7]

The Role of the Catalyst:

4-(Dimethylamino)pyridine (DMAP) is a highly effective nucleophilic catalyst for this transformation. The mechanism involves the initial attack of DMAP on one of the carbonyl carbons of Boc anhydride, leading to the formation of a highly reactive N-tert-butoxycarbonylpyridinium intermediate. This intermediate is significantly more electrophilic than Boc anhydride itself, rendering it susceptible to attack by the hydroxyl group of the alcohol. The catalyst, DMAP, is regenerated upon completion of the reaction cycle.[8]

Chemoselectivity in Polyfunctional Molecules:

In a molecule containing both a phenolic hydroxyl group and a benzylic alcohol, such as p-hydroxybenzyl alcohol, the phenolic hydroxyl is more acidic and its corresponding phenoxide is a better nucleophile than the neutral benzylic alcohol. This difference in nucleophilicity can be exploited to achieve selective protection of the phenolic hydroxyl group. By carefully controlling the reaction conditions, particularly the choice of base and stoichiometry of reagents, one can favor the formation of the O-Boc protected phenol.

Visualizing the Synthetic Workflow

A clear understanding of the experimental sequence is crucial for successful execution. The following diagram outlines the key steps involved in the Boc protection of p-hydroxybenzyl alcohol.

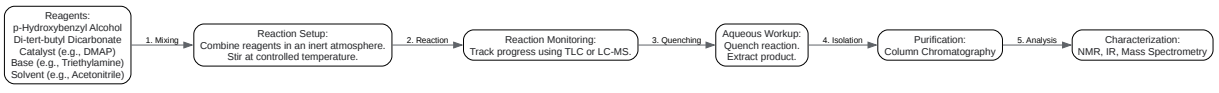

Click to download full resolution via product page

© 2026 BenchChem. All rights reserved.

Caption: Experimental workflow for the Boc protection of p-hydroxybenzyl alcohol.

Detailed Experimental Protocol: Synthesis of p-O-t-Boc-benzyl Alcohol

This protocol provides a step-by-step methodology for the selective Boc protection of the phenolic hydroxyl group of p-hydroxybenzyl alcohol.

Materials:

- p-Hydroxybenzyl alcohol
- Di-tert-butyl dicarbonate (Boc_2O)[9][10]
- 4-(Dimethylamino)pyridine (DMAP)
- Triethylamine (Et_3N)
- Anhydrous acetonitrile (MeCN)
- Ethyl acetate (EtOAc)
- Saturated aqueous sodium bicarbonate ($NaHCO_3$) solution
- Brine (saturated aqueous NaCl solution)
- Anhydrous magnesium sulfate ($MgSO_4$)
- Silica gel for column chromatography

Procedure:

- Reaction Setup: To a clean, dry round-bottom flask equipped with a magnetic stir bar and under an inert atmosphere (e.g., nitrogen or argon), add p-hydroxybenzyl alcohol (1.0 eq).
- Dissolve the starting material in anhydrous acetonitrile.
- Add triethylamine (1.1 eq) to the solution and stir for 5 minutes at room temperature.

© 2026 BenchChem. All rights reserved.

- In a separate container, dissolve di-tert-butyl dicarbonate (1.1 eq) and a catalytic amount of DMAP (0.1 eq) in anhydrous acetonitrile.
- Slowly add the Boc_2O/DMAP solution to the stirred solution of p-hydroxybenzyl alcohol over a period of 10-15 minutes.
- Reaction Monitoring: Allow the reaction to stir at room temperature. Monitor the progress of the reaction by thin-layer chromatography (TLC) or liquid chromatography-mass spectrometry (LC-MS) until the starting material is consumed.
- Workup: Once the reaction is complete, quench the reaction by adding saturated aqueous $NaHCO_3$ solution.
- Transfer the mixture to a separatory funnel and extract the product with ethyl acetate (3 x volumes).
- Combine the organic layers and wash with brine.
- Drying and Concentration: Dry the organic layer over anhydrous $MgSO_4$, filter, and concentrate the solvent under reduced pressure using a rotary evaporator.
- Purification: Purify the crude product by flash column chromatography on silica gel using an appropriate eluent system (e.g., a gradient of ethyl acetate in hexanes) to afford the pure **p-O-t-Boc-benzyl alcohol**.
- Characterization: Characterize the final product by nuclear magnetic resonance (NMR) spectroscopy, infrared (IR) spectroscopy, and mass spectrometry to confirm its identity and purity. The target compound, **p-O-t-Boc-benzyl alcohol**, is commercially available, and its characterization data can be referenced.[11][12][13]

Mechanistic Insights and Reaction Parameters

The success of the selective Boc protection hinges on understanding the underlying mechanism and the influence of various reaction parameters.

© 2026 BenchChem. All rights reserved.

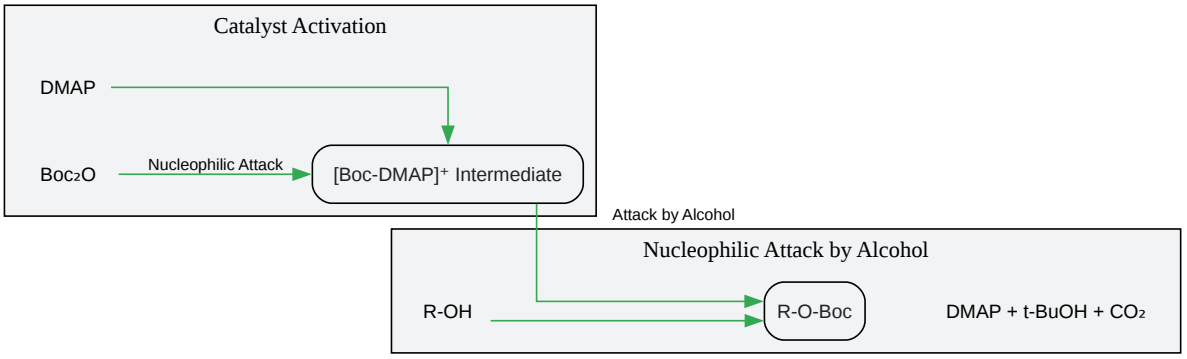

Click to download full resolution via product page

Need Custom Synthesis?

BenchChem offers custom synthesis for rare earth carbides and specific isotopiclabeling.

Email: info@benchchem.com or Request Quote Online.

Sources

- 1. pdf.benchchem.com [pdf.benchchem.com]
- 2. echemi.com [echemi.com]
- 3. pdf.benchchem.com [pdf.benchchem.com]
- 4. tert-Butyloxycarbonyl protecting group - Wikipedia [en.wikipedia.org]
- 5. jk-sci.com [jk-sci.com]
- 6. total-synthesis.com [total-synthesis.com]
- 7. pdf.benchchem.com [pdf.benchchem.com]
- 8. Boc Protection Mechanism (Boc2O + DMAP) [commonorganicchemistry.com]
- 9. Organic Syntheses Procedure [orgsyn.org]
- 10. fishersci.com [fishersci.com]

© 2026 BenchChem. All rights reserved.

- 11. P-O-T-BOC-BENZYL ALCOHOL | CAS#:887353-38-0 | Chemsrc [chemsrc.com]
- 12. usbio.net [usbio.net]
- 13. scbt.com [scbt.com]
- To cite this document: BenchChem. [Application and Protocol Guide: Strategic Boc Protection of Hydroxybenzyl Alcohols]. BenchChem, [2026]. [Online PDF]. Available at: [https://www.benchchem.com/product/b015022/docs#application-and-protocol-guide-strategic-boc-protection-of-hydroxybenzyl-alcohols]

Disclaimer & Data Validity:

The information provided in this document is for Research Use Only (RUO) and is strictly not intended for diagnostic or therapeutic procedures. While BenchChem strives to provide accurate protocols, we make no warranties, express or implied, regarding the fitness of this product for every specific experimental setup.

Technical Support: The protocols provided are for reference purposes. Unsure if this reagent suits your experiment?

Need Industrial/Bulk Grade? Request Custom Synthesis Quote

BenchChem

Our mission is to be the trusted global source of essential and advanced chemicals, empowering scientists and researchers to drive progress in science and industry.

Contact

Address: 3281 E Guasti Rd

Ontario, CA 91761, United States

Phone: (601) 213-4426

Email: info@benchchem.com

Contact our Ph.D. Support Team for a compatibility check

© 2026 BenchChem. All rights reserved.